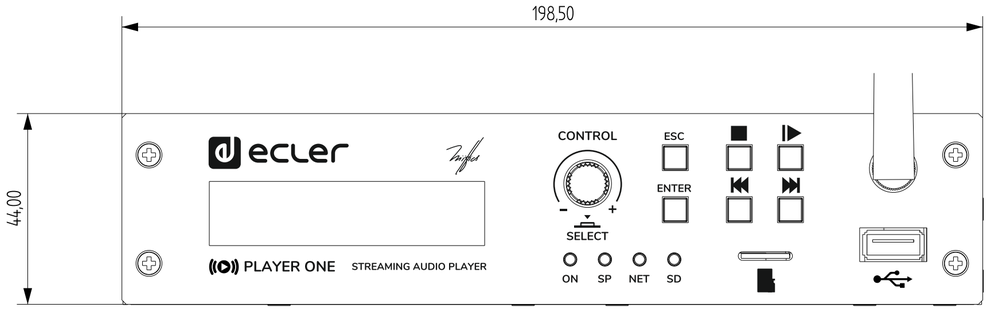
198,50
44,00
ecler
CONTROL
ESC
ENTER
SELECT
PLAYER ONE
STREAMING AUDIO PLAYER
ON
SP
NET
SD

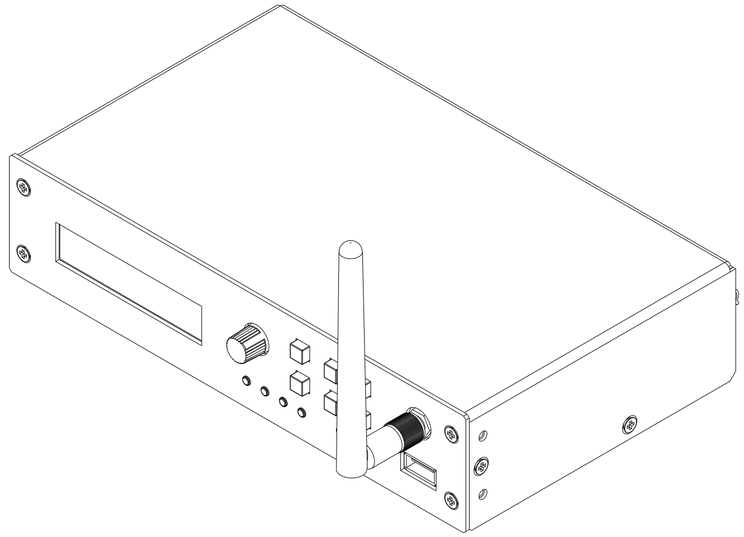

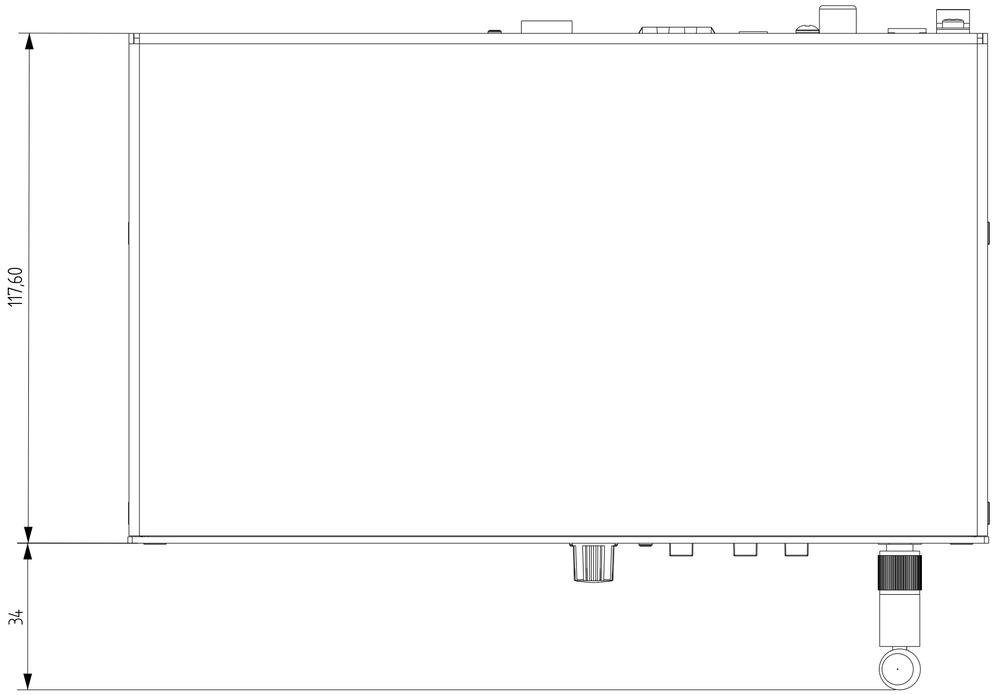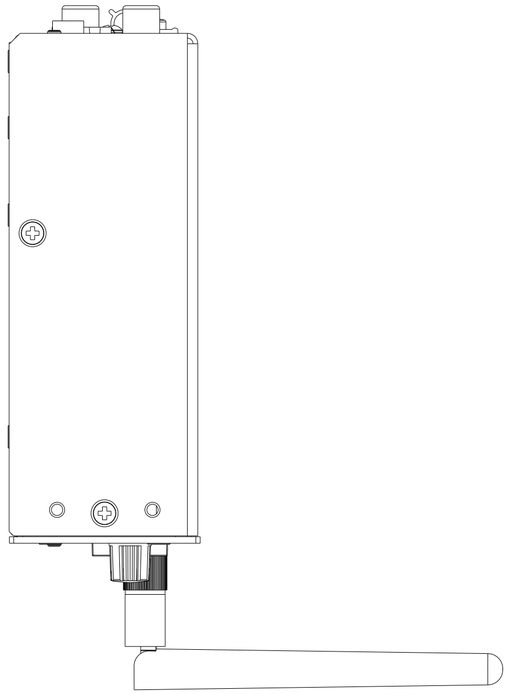
117,60
34