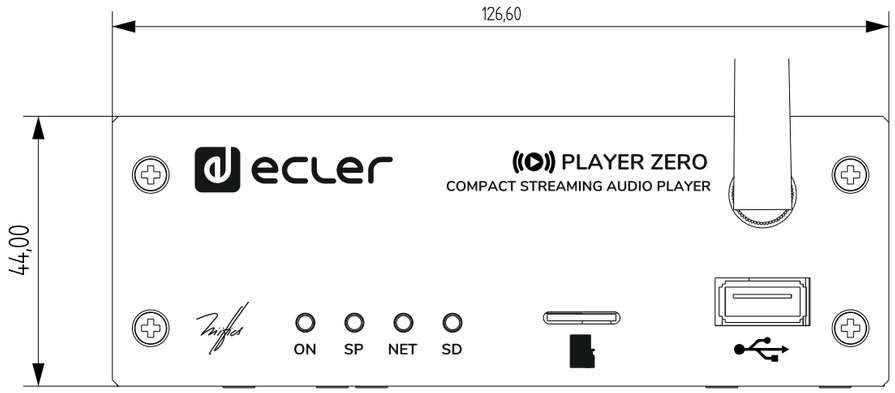
126,60
44,00
ecler
PLAYER ZERO
COMPACT STREAMING AUDIO PLAYER
ON
SP
NET
SD

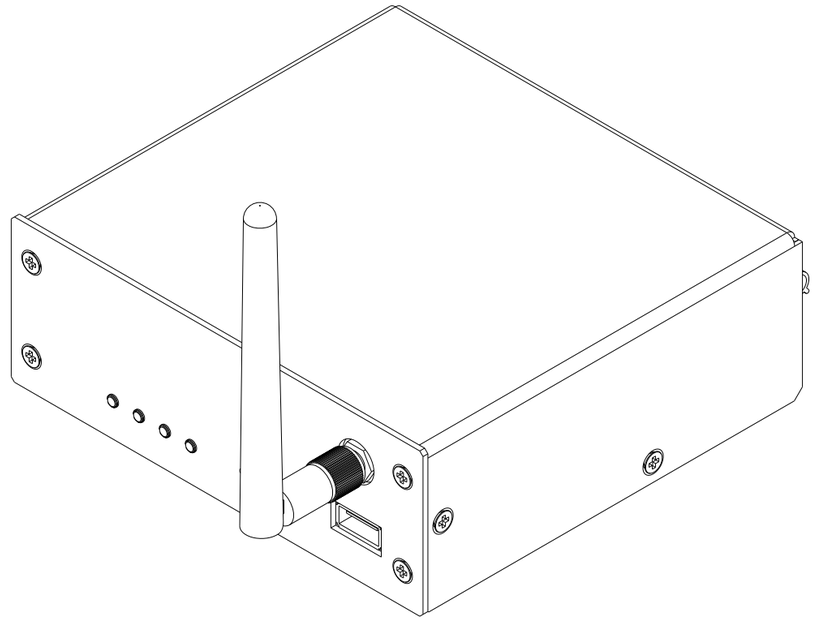

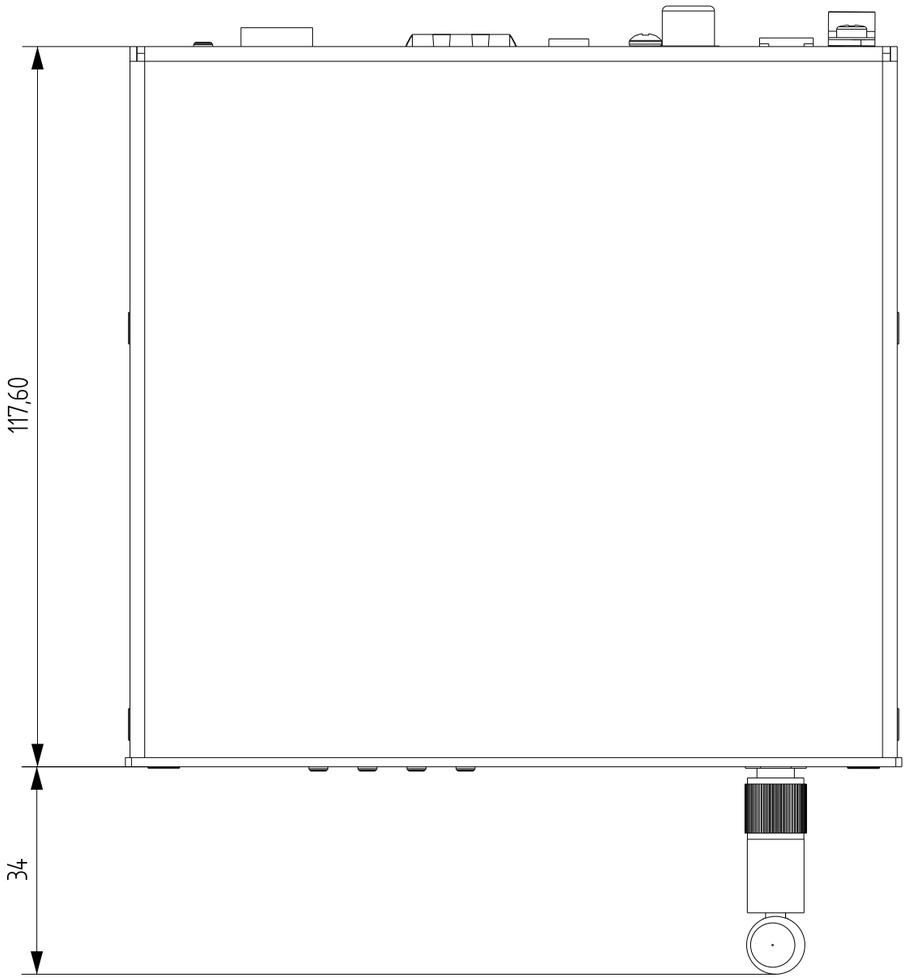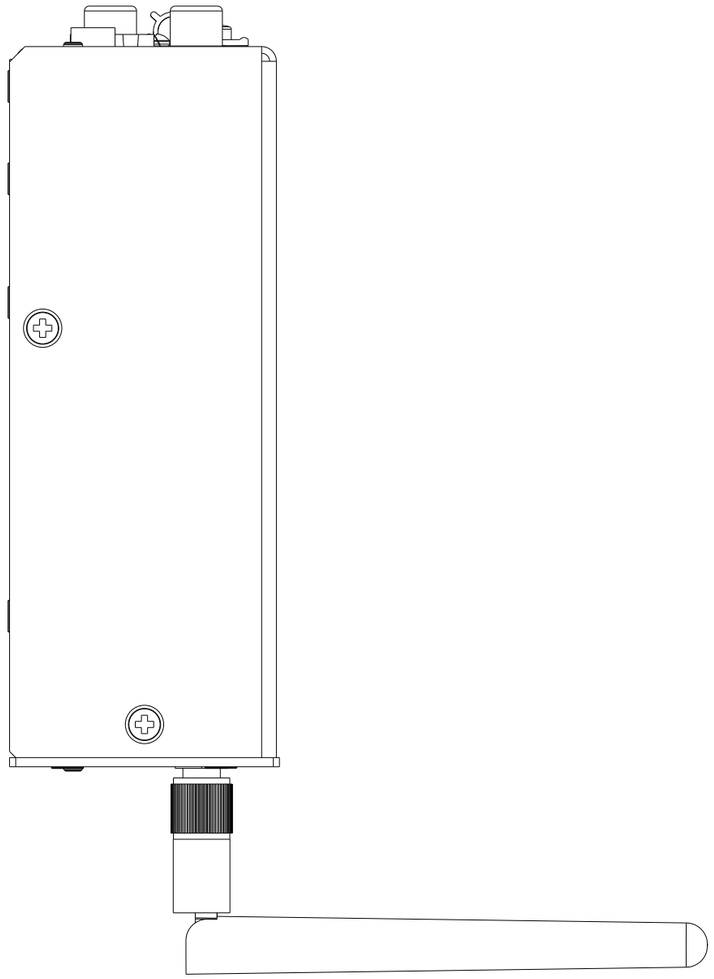
117,60
34