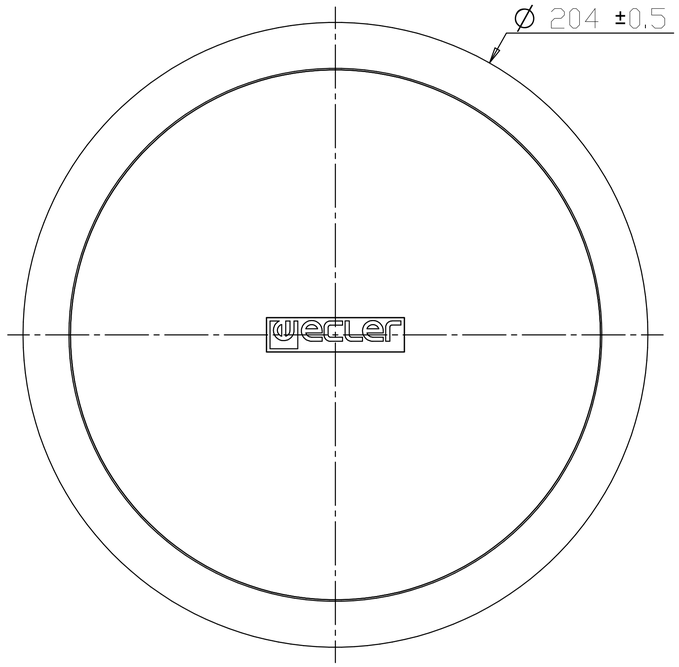
Ø 204 ±0.5
wecler

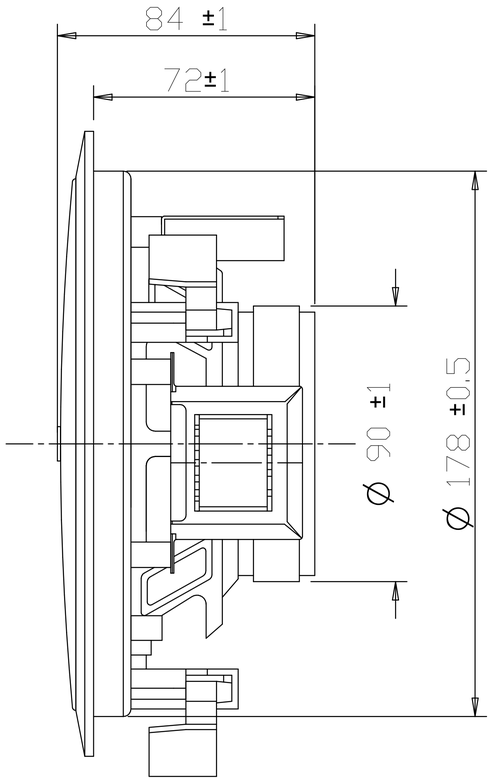
84 ±1
72±1
Ø 90 ±1
Ø 178 ±0.5

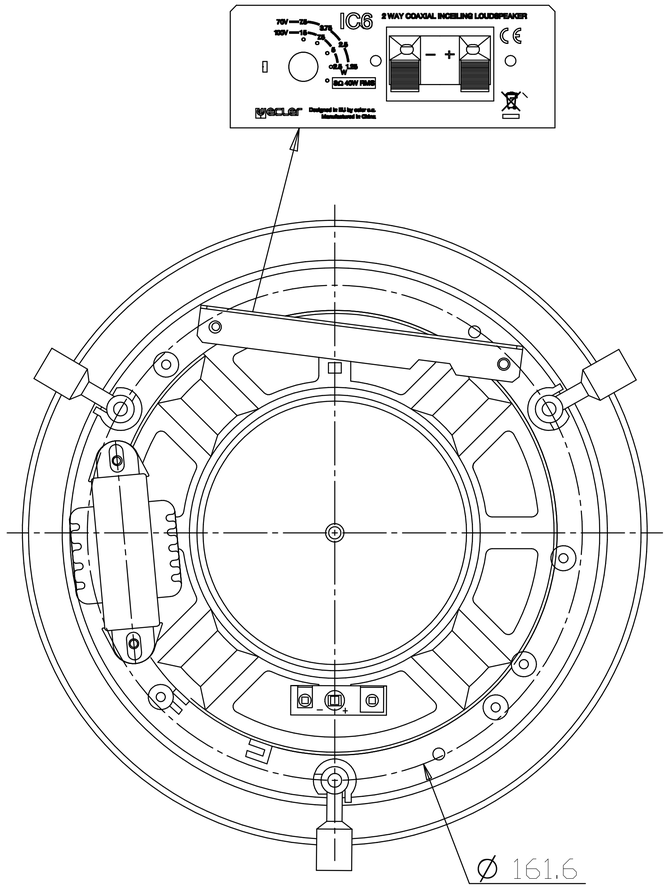
IC6
2 WAY COAXIAL INCEILING LOUDSPEAKER
70V
100V
2.5
5
10
20
40
CEILING
W
IEC-40W FUSE
WECLER
Designed in EU by wecler s.a.
Manufactured in China
Ø 161.6