Ecler IC3 Mechanical Diagram

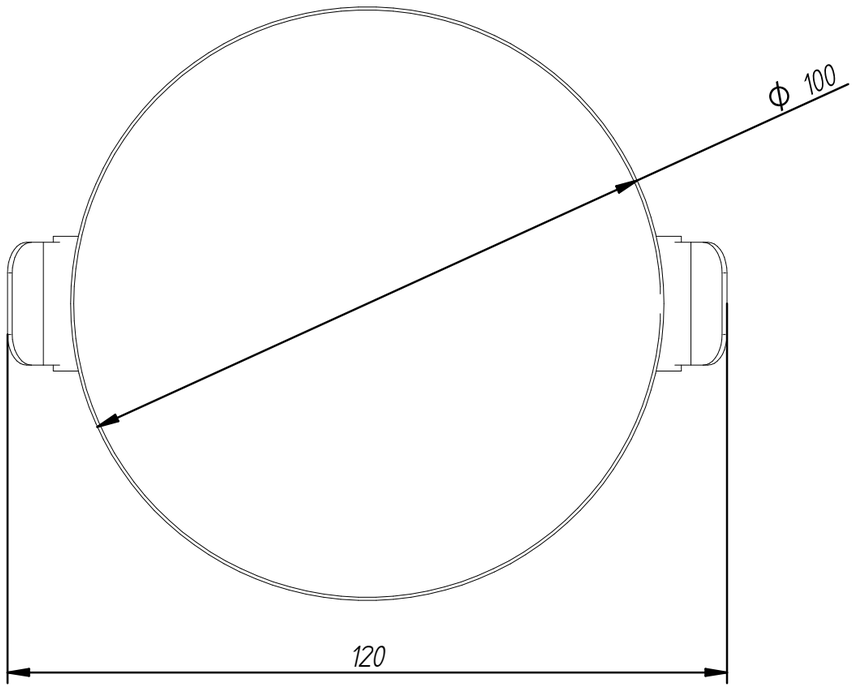

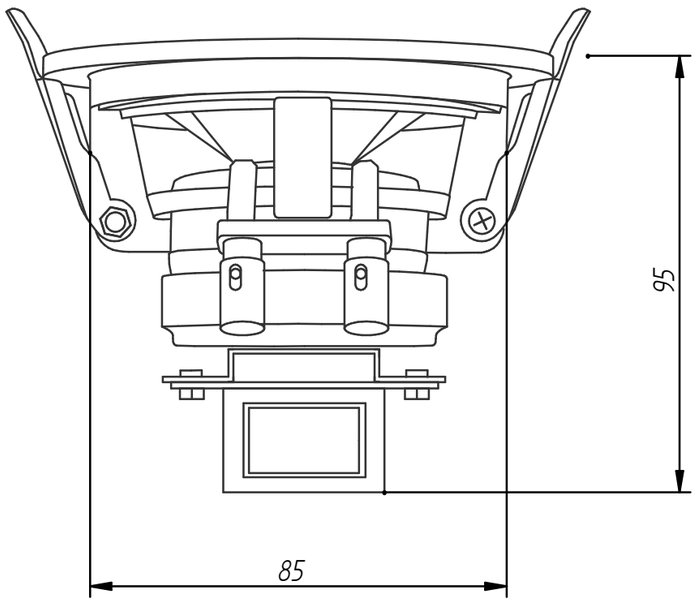

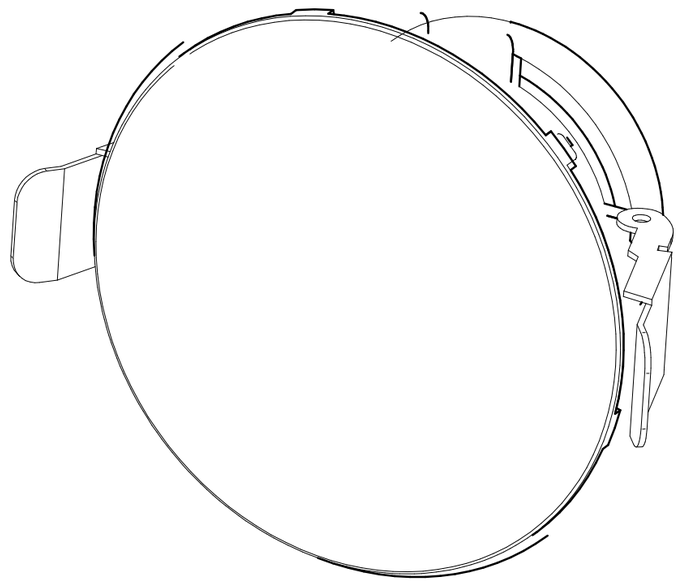

All the measurments are in mm

61-1114-0100

www.ecler.com