Ecler AURA-4HI50 Mechanical Diagram

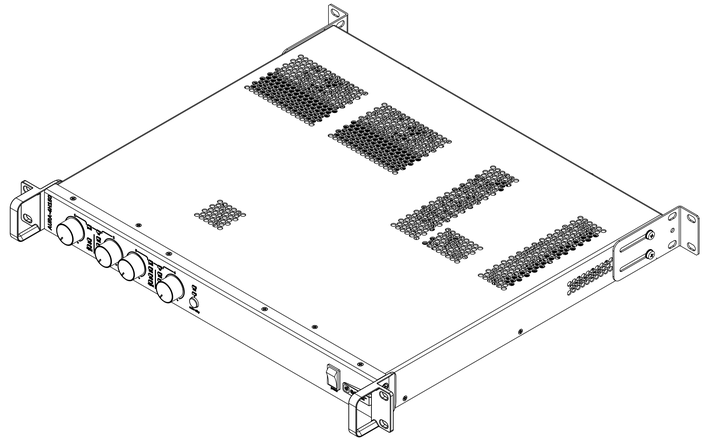

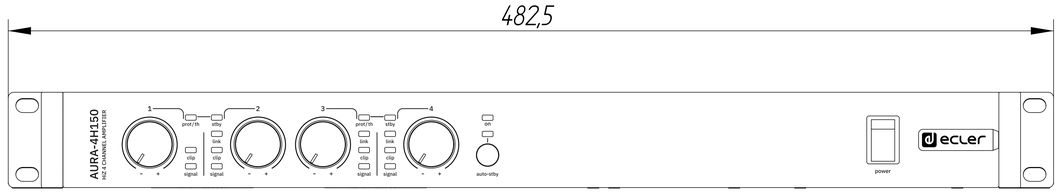

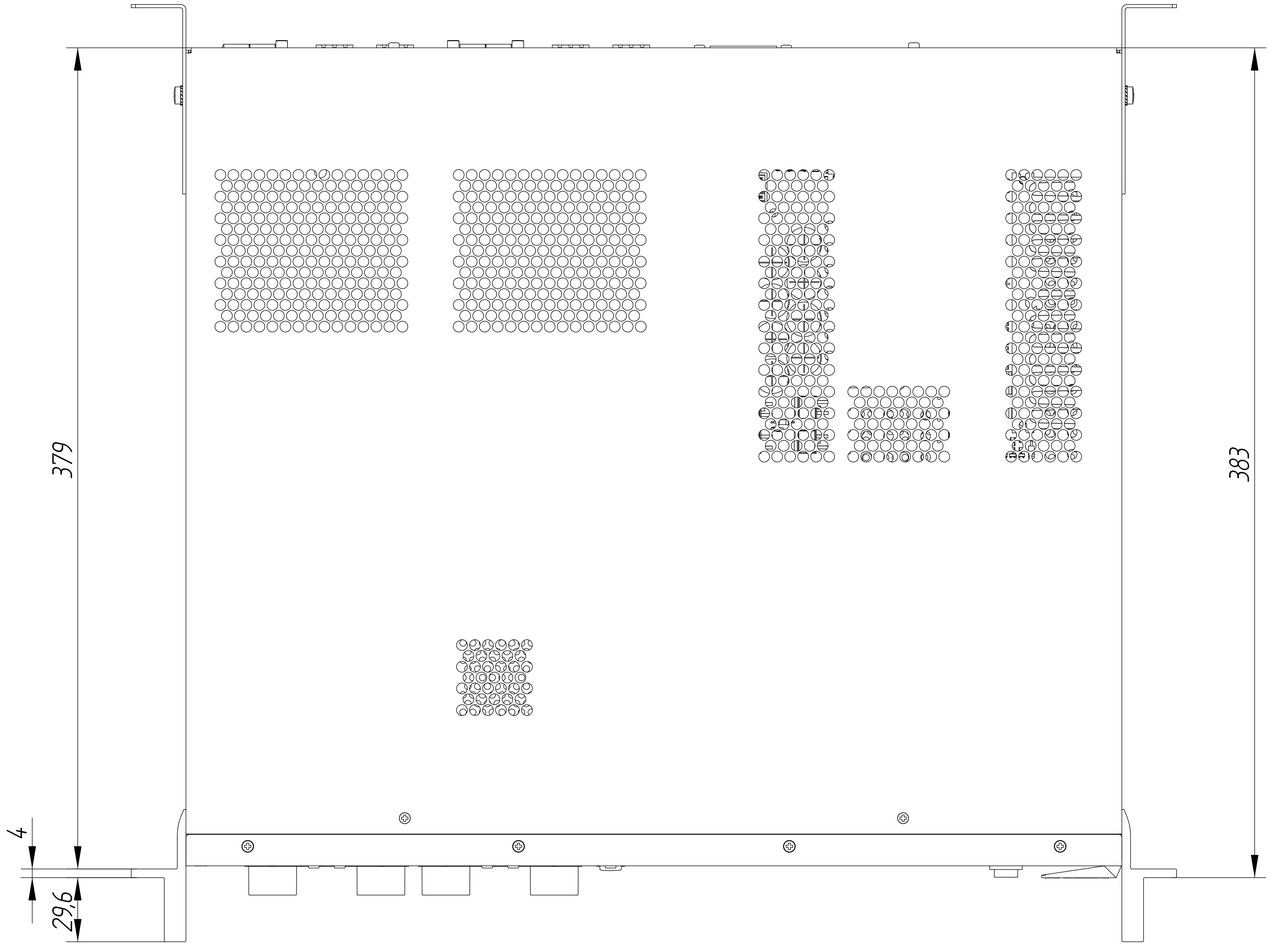

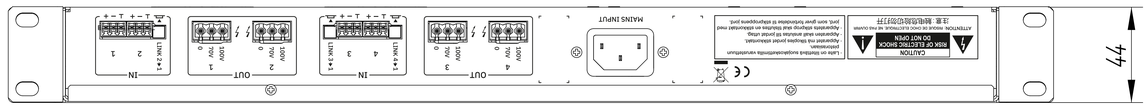

All the measurments are in mm

61-0997-0100

www.ecler.com