# Ecler VIVO-X8 Mechanical Diagram

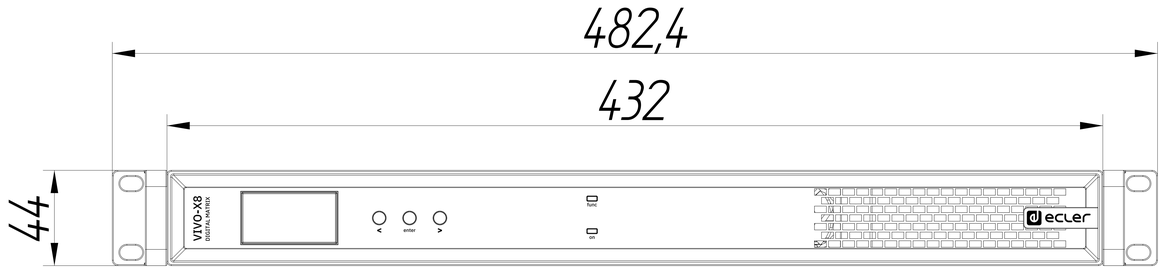


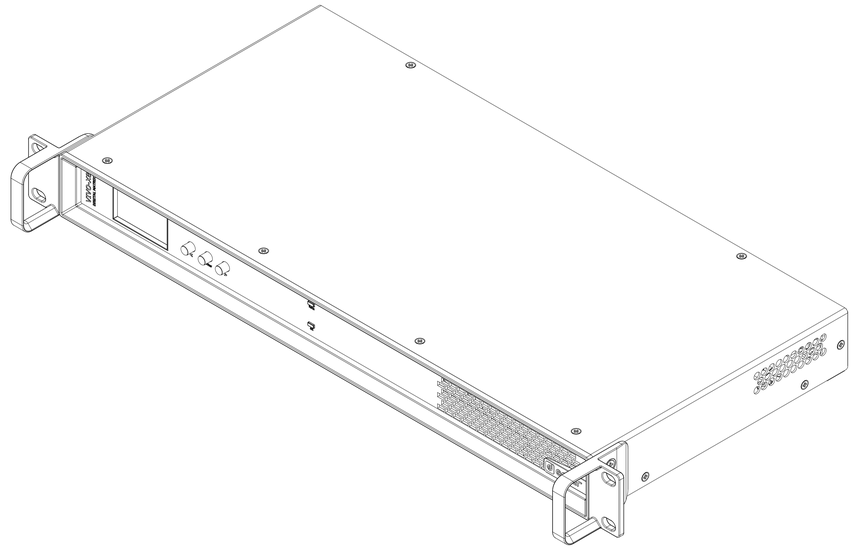

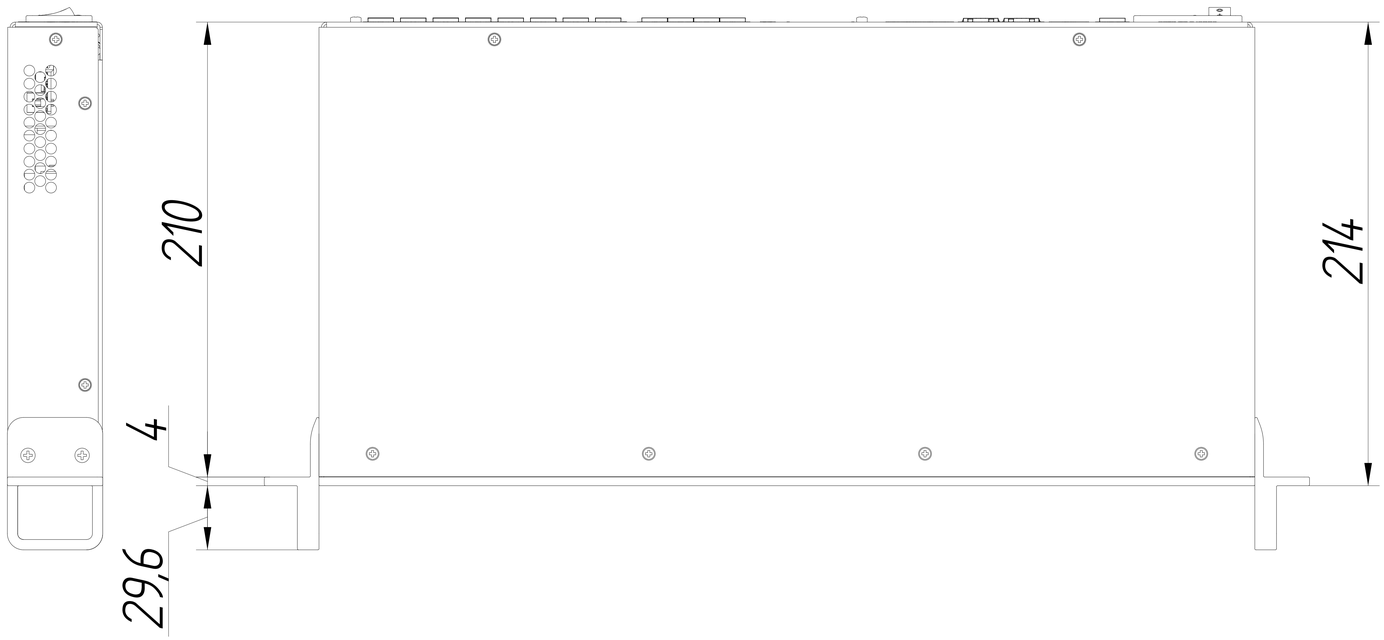


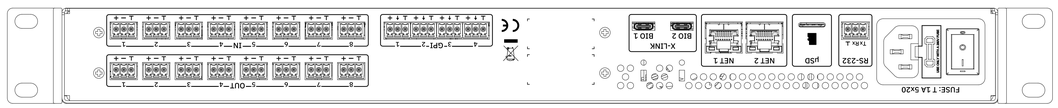


All the measurments are in mm

61-1186-0100

www.ecler.com