TOCA Series

WALL & DESKTOP CONTROL INTERFACES

Wall-mounted Remote Controls

USER MANUAL

TABLE OF CONTENTS

1. PRECAUTIONS 4
   1.1 Important Notice 4
   1.2 Key Safety Directions 5
   1.3 Cleaning Directions 5
2. WARRANTY & ENVIRONMENT 6
3. PACKAGE CONTENTS 7
   3.1 TOCA-VOL 7
   3.2 TOCA-VOLSR 7
   3.3 TOCA-40AT 7
   3.4 TOCA-CXCBO 7
   3.5 TOCA-CXJRCA 7
   3.6 TOCA-MIXT 8
   3.7 TOCA-CTRL1 8
4. DESCRIPTION & FEATURES 9
   4.1 Main Features 9
5. VOLUME CONTROLS / SOURCE SELECTION 10
   5.1 TOCA-VOL 10
      5.1.1 Main Features 10
      5.1.2 Installation Diagram 11
      5.1.3 Connection Diagram 12
   5.2 TOCA-VOLSR 13
      5.2.1 Main Features 13
      5.2.2 Installation Diagram 14
      5.2.3 Connection Diagram 15
6. REMOTE ATTENUATORS 16
   6.1 TOCA-40AT 16
      6.1.1 Main Features 16
      6.1.2 Installation Diagram 17
      6.1.3 Connection Diagram 18
7. REMOTE CONNECTORS 19
   7.1 TOCA-CXCBO 19
      7.1.1 Main Features 19
      7.1.2 Installation Diagram 20
      7.1.3 Connection Diagram 21

7.2 TOCA-CXJRCA 22
7.2.1 Main Features 22
7.2.2 Installation Diagram 23
7.2.3 Connection Diagram 24
8. MIXER / CONTROL DEVICES 25
8.1 TOCA-MIXT 25
8.1.1 Main Features 25
8.1.2 Panel Functions 26
8.1.3 Installation Diagram 27
8.1.4 Connection Diagram 28
8.1.5 Configuration Diagram 28
8.2 TOCA-CTRL1 29
8.2.1 Main Features 29
8.2.2 Panel Functions 30
8.2.3 Installation & Connection Diagram 31
8.2.4 Cable Length Guidelines and External Power Supply Connection 32
8.2.5 Start-up & Operation 33
9. TECHNICAL DATA 37
9.1 Technical Specifications 37
9.1.1 TOCA-VOL 37
9.1.2 TOCA-VOLSR 38
9.1.3 TOCA-40AT 39
9.1.4 TOCA-CXCBO 40
9.1.5 TOCA-CXJRCA 41
9.1.6 TOCA-MIXT 42
9.1.7 TOCA-CTRL1 43
9.2 Mechanical Diagram 44
9.2.1 TOCA-VOL 44
9.2.2 TOCA-VOLSR 45
9.2.3 TOCA-40AT 46
9.2.4 TOCA-CXCBO 47
9.2.5 TOCA-CXJRCA 48
9.2.6 TOCA-MIXT 49
9.2.7 TOCA-CTRL1 50

1. PRECAUTIONS

1.1 Important Notice

WARNING: SHOCK HAZARD - DO NOT OPEN

AVIS: RISQUE DE CHOC ÉLECTRIQUE - NE PAS OUVRIR

The flashing light with an arrowhead symbol inside an equilateral triangle on it is intended to alert the user of the presence of non-insulated "dangerous voltage" within the enclosure, which might be of sufficient magnitude to pose a risk of electric shock to users.

The exclamation mark within an equilateral triangle is intended to alert the user of the requirement for important operating and maintenance (servicing), for which instructions may be found in the literature accompanying the appliance.

WARNING (If applicable): Terminals marked with symbol ⚡ may be of sufficient magnitude to pose a risk of electric shock. The external wiring connected to terminals requires installation by a technician, or the use of ready-made leads or cords.

WARNING: To prevent fire or shock hazard, do not expose this equipment to rain or humidity.

WARNING: A device with Class I manufacturing ought to be connected to a mains socket outlet with a protective earthing connection.

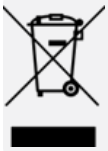

WARNING: Ecler products have a long lifetime of more than 10 years. This product must never be discarded as unsorted urban waste, but must be taken to the nearest electrical and electronic waste treatment centre.

1.2 Key Safety Directions

1. Read the following directions.
2. Keep the following directions.
3. Observe all warnings.
4. Follow all instructions.
5. Do not use this device in proximity to water.
6. Clean only with a dry cloth.
7. Do not block any ventilation openings. Install in accordance with the manufacturer's instructions.
8. Do not install near any heat sources such as radiators, heat registers, stoves, or other devices (including amplifiers) that may release heat.
9. Do not defeat the safety purpose of the polarized or grounding type plug. A polarized plug has two blades, with one being wider than the other. A grounding type plug has two blades and a third grounding prong. The wide blade or the third prong are provided for your safety. If the provided plug does not fit into your outlet, contact a qualified electrician for a replacement of the obsolete outlet.
10. Protect the power cord from being walked on or pinched, particularly at the plugs, convenience receptacles, and at the point of exit from the device.
11. Only use attachments/accessories specified by the manufacturer.
12. Unplug the device during lightning storms or when unused for long periods.
13. Refer all servicing to qualified personnel. Servicing is required when the device has been damaged in any way, such as power supply cord or plug damage, liquid spillage or objects onto the device, the device has been exposed to rain or humidity, does not operate normally, or has been dropped.
14. Disconnecting from mains: When switching off the POWER switch, all the functions and light indicators of the unit will be stopped, but fully disconnecting the device from mains is done by unplugging the power cable from the mains input socket, therefore, it should always remain easily accessible
15. Equipment is connected to a socket-outlet with an earthing connection by means of a power cord.
16. The marking information is located at the top/rear of the unit.
17. The device shall not be exposed to dripping or splashing liquids, and no liquid-filled objects, such as a filled up glass, shall be placed on top of the device.

1.3 Cleaning Directions

Clean the unit with a soft, dry clean cloth or slightly wet with water and neutral liquid soap only, then dry it with a clean cloth. Be careful that water never gets into the unit through any hole. Never use alcohol, benzine, solvents or abrasive substances to clean this unit.

NEEC AUDIO BARCELONA, S.L. accepts no liability for any damage that may be caused to people, animal, or objects due to failure to comply with the warnings above.

2. WARRANTY & ENVIRONMENT

Thank you for choosing our Ecler TOCA Series model !
We greatly value your trust.

It is **VERY IMPORTANT to carefully read this manual and to fully understand its contents before any connecting takes place** in order to make the best use of this equipment, as well as to get the best performance from it.

To ensure optimal operation of this device, **we strongly recommend that its maintenance be carried out by our authorised Technical Services.**

All ECLER products are covered by warranty, please refer to www.ecler.com or the warranty card included with this product for the period of validity and conditions.

Ecler is truly committed with the environment and planet sustainability, energy saving and CO_2 emission reduction. Recycling materials and using non-contaminant components are also top priorities in our green crusade.

Ecler has deeply evaluated and analyzed the environmental impacts of all the processes involved in the production of this product, including packaging, and has alleviated, reduced and/or compensated for them.

3. PACKAGE CONTENTS

3.1 TOCA-VOL

- 1x TOCA-VOL Wall Panel unit.
- 1x Single Frame TOCA Series.
- 1x TOCA-VOL Front Panel.
- 1x Euroblock connector.
- 1x First Steps Guide.
- 1x Warranty card.

3.2 TOCA-VOLSR

- 1x TOCA-VOSRL Wall Panel unit.
- 1x Single Frame TOCA Series.
- 1x TOCA-VOLSR Front Panel.
- 2x Euroblock connector.
- 1x First Steps Guide.
- 1x Warranty card.

3.3 TOCA-40AT

- 1x TOCA-40AT Wall Panel unit.
- 1x Single Frame TOCA Series.
- 1x TOCA-40AT Front Panel.
- 1x First Steps Guide.
- 1x Warranty card.

3.4 TOCA-CXCBO

- 1x TOCA-CXCBO Wall Panel unit.
- 1x Single Frame TOCA Series.
- 1x TOCA-CXCBO Front Panel.
- 1x Euroblock connector.
- 1x First Steps Guide.
- 1x Warranty card.

3.5 TOCA-CXJRCA

- 1x TOCA-CXJRCA Wall Panel unit.
- 1x Single Frame TOCA Series.
- 1x TOCA-CXJRCA Front Panel.
- 2x Euroblock connector.
- 1x First Steps Guide.
- 1x Warranty card.

3.6 TOCA-MIXT

- 1x TOCA-MIXT Wall Panel unit.
- 1x Single Frame TOCA Series.
- 1x TOCA-MIXT Front Panel.
- 1x Euroblock connector.
- 1x TOCA-CTRL1 wire connector.
- 1x First Steps Guide.
- 1x Warranty card.

3.7 TOCA-CTRL1

- 1x TOCA-CTRL1 Wall Panel unit.
- 1x Single Frame TOCA Series.
- 1x TOCA-CTRL1 Front Panel.
- 1x Rotary Encoder Knob.
- 1x Euroblock connector.
- 1x First Steps Guide.
- 1x Warranty card.

4. DESCRIPTION & FEATURES

TOCA Series is Ecler's new generation of remote control wall panels for audio systems, designed to seamlessly replace the WPa Series from 2026 onwards. Featuring a modern, elegant, and discreet aesthetic, TOCA panels offer intuitive control and easy installation, meeting the needs of both installers and end users.

Among the main improvements are updated electronics, compatibility with standard flush-mounted boxes, availability in black and white versions, and a high-quality acrylic surface. TOCA panels are designed to deliver reliability and ease of use, making them the ideal solution for professional audio environments where design, functionality, and installation flexibility are essential.

4.1 Main Features

- Compatibility with standard flush-mounted boxes.
- High-quality acrylic surface.
- Available in white (RAL 9003) or black (RAL 9005).
- Optional double frame TOCA-2FR for installing two TOCA Series units side by side. Available in black or white.
- The features listed above are common to all models. For additional model-specific features, refer to the Key Features section of the corresponding model.

5. VOLUME CONTROLS / SOURCE SELECTION

5.1 TOCA-VOL

TOCA-VOL is a wall-mounted remote control panel for volume management in professional audio systems. It is compatible with all devices featuring a 0–10 and 0-12 VDC control input, providing precise, reliable, and intuitive audio level adjustment.

5.1.1 Main Features

- DIP switch configuration.
- Compatibility with standard flush-mounted boxes.
- High-quality acrylic surface.
- Available in white (RAL 9003) or black (RAL 9005).
- Optional double frame TOCA-2FR for installing two TOCA Series units side by side. Available in black or white.

For detailed installation and connection instructions, refer to the next two pages.

5.1.2 Installation Diagram

1

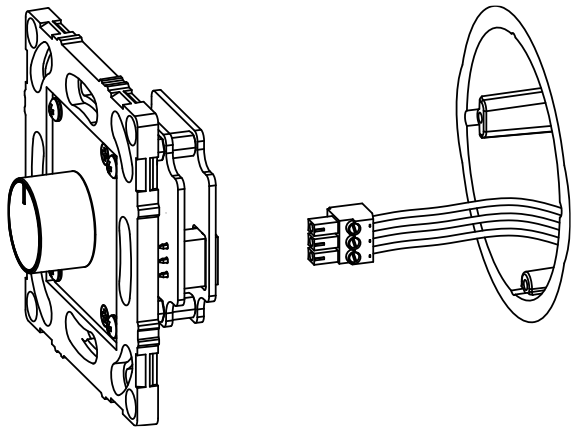

Connect the wires to the supplied Euroblock connector, then insert the connectors into the device. **Refer to the Connection Diagram section for the appropriate wiring connections**.

2

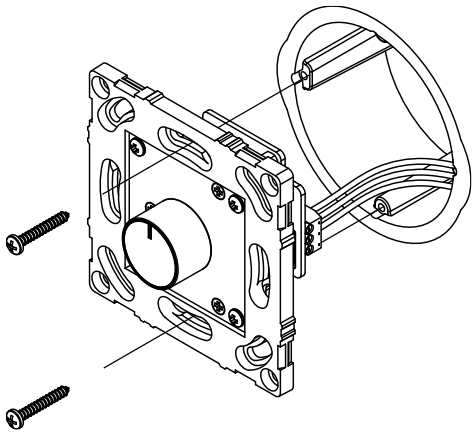

Secure the device to the surface-mount or flush-mount box using the appropriate screws (mounting boxes and screws not supplied).

3

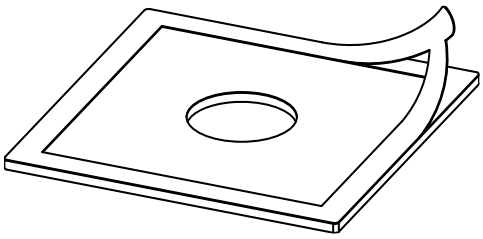

Remove the adhesive protective layer from the front panel cover

4

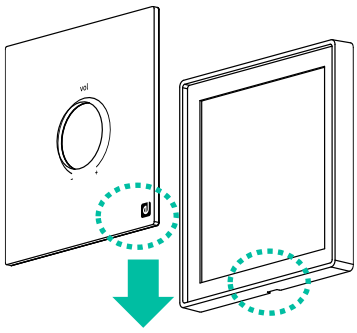

Carefully attach the front panel cover to the frame, ensuring that the slot in the frame is positioned at the bottom to allow for subsequent removal if necessary.

5

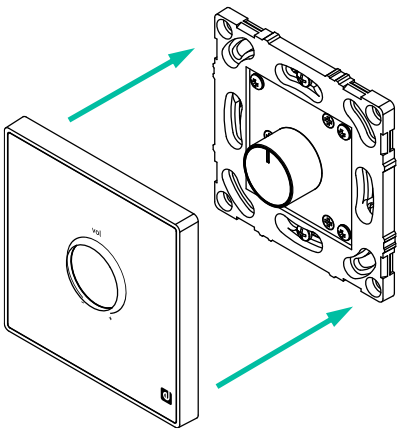

Once the front panel cover is attached to the frame, place both onto the device and press until they snap into place with an audible click.

6

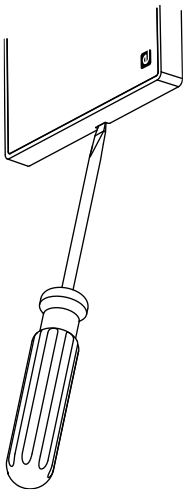

To remove the front panel after installation, insert a flat-head screwdriver into the slot located at the bottom of the frame and gently lever it outward to release it.

5.1.3 Connection Diagram

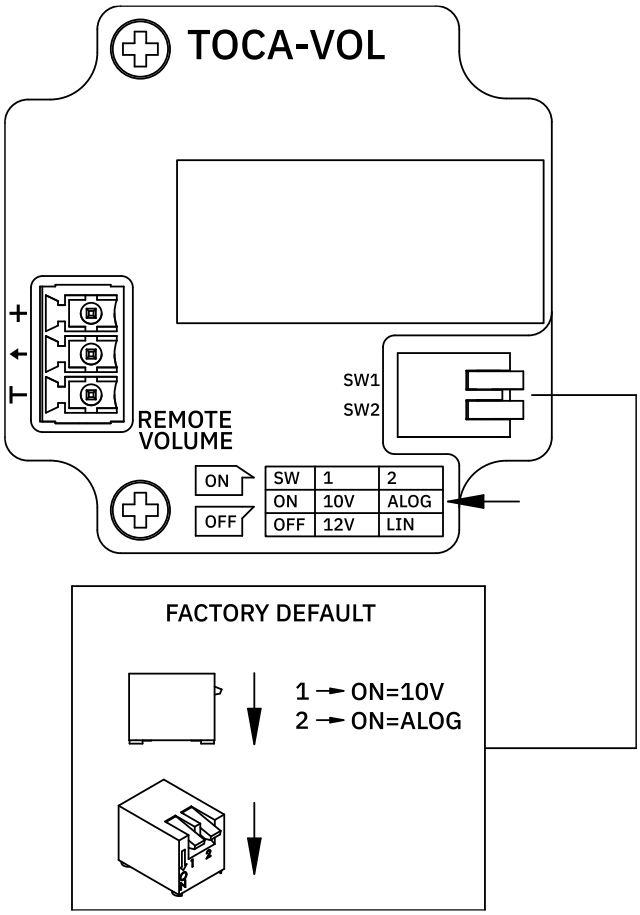

5.2 TOCA-VOLSR

TOCA-VOLSR is a wall-mounted remote control panel that enables volume control and source or preset selection. It is compatible with devices using 0–10 and 0-12 VDC control signals, offering a versatile and elegant solution for local audio system control.

5.2.1 Main Features

- Enables volume control and source or preset selection.
- DIP switch configuration.
- Compatibility with standard flush-mounted boxes.
- High-quality acrylic surface.
- Available in white (RAL 9003) or black (RAL 9005).
- Optional double frame TOCA-2FR for installing two TOCA Series units side by side. Available in black or white.

For detailed installation and connection instructions, refer to the next two pages.

5.2.2 Installation Diagram

1

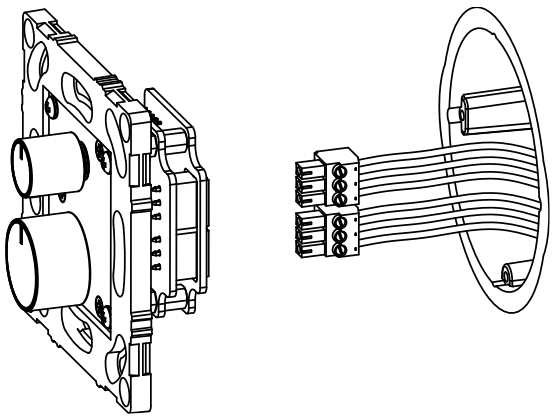

Connect the wires to the 2 supplied Euroblock connectors, then insert the connectors into the device. **Refer to the Connection Diagram section for the appropriate wiring connections.**

2

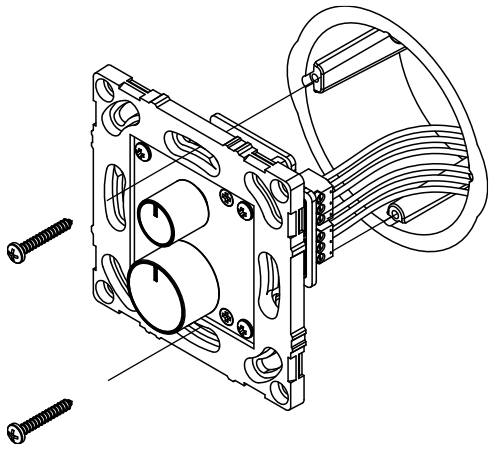

Secure the device to the surface-mount or flush-mount box using the appropriate screws (mounting boxes and screws not supplied).

3

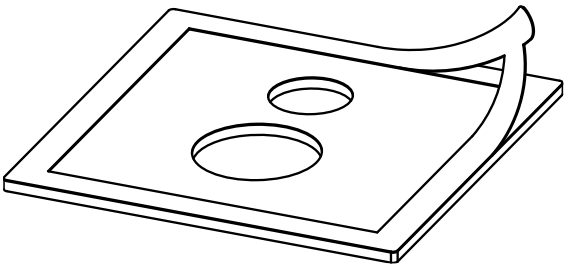

Remove the adhesive protective layer from the front panel cover

4

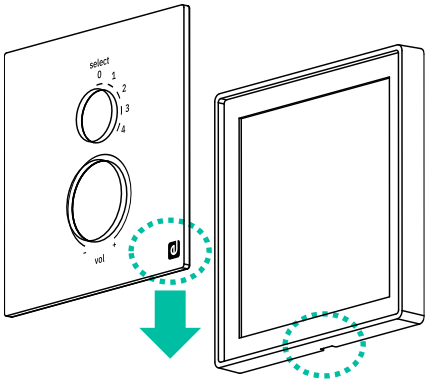

Carefully attach the front panel cover to the frame, ensuring that the slot in the frame is positioned at the bottom to allow for subsequent removal if necessary.

5

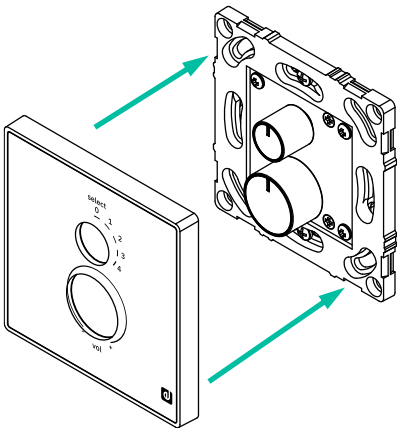

Once the front panel cover is attached to the frame, place both onto the device and press until they snap into place with an audible click.

6

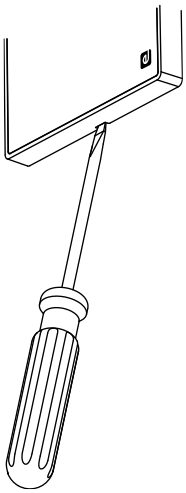

To remove the front panel after installation, insert a flat-head screwdriver into the slot located at the bottom of the frame and gently lever it outward to release it.

5.2.3 Connection Diagram

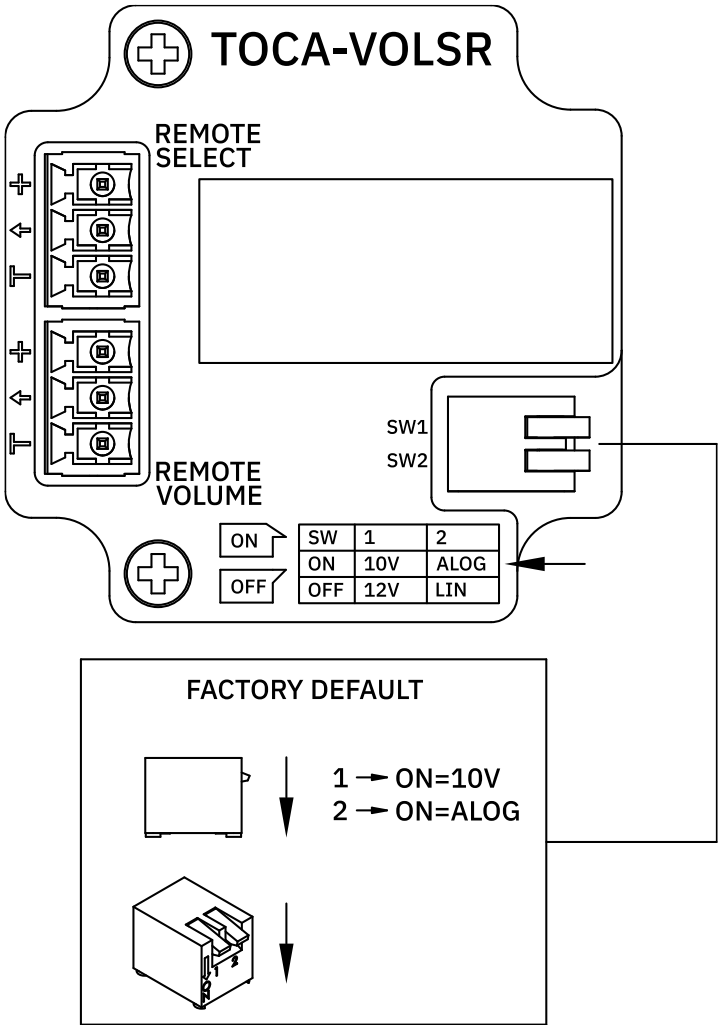

6. REMOTE ATTENUATORS

6.1 TOCA-40AT

TOCA-40AT is a line attenuator for 70 / 100 V systems, featuring an integrated priority relay activated by a 24 VDC signal. It offers a maximum output power of 40 W and is an ideal solution for zone control in public address and background music installations.

6.1.1 Main Features

- Integrated 24VDC priority relay.
- Compatibility with standard flush-mounted boxes (deep boxes only).
- High-quality acrylic surface.
- Available in white (RAL 9003) or black (RAL 9005).
- Optional double frame TOCA-2FR for installing two TOCA Series units side by side. Available in black or white.

For detailed installation and connection instructions, refer to the next two pages.

6.1.2 Installation Diagram

1

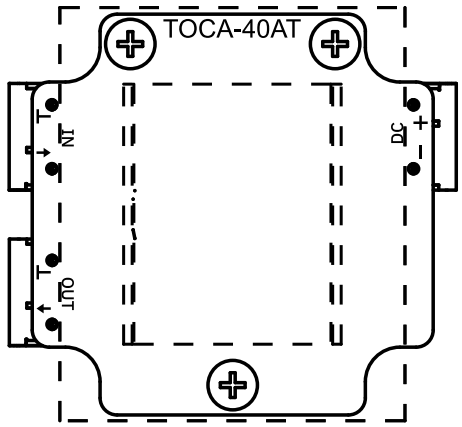

Check the wiring guide on the base of the device before connecting the wires.

2

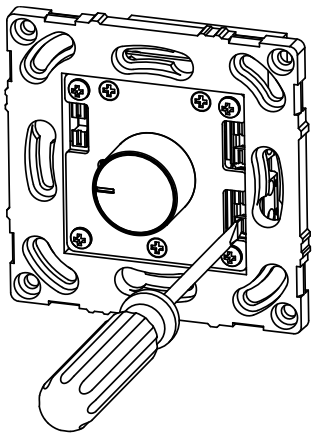

Using a screwdriver, press the connector release tabs to insert the wires.

3

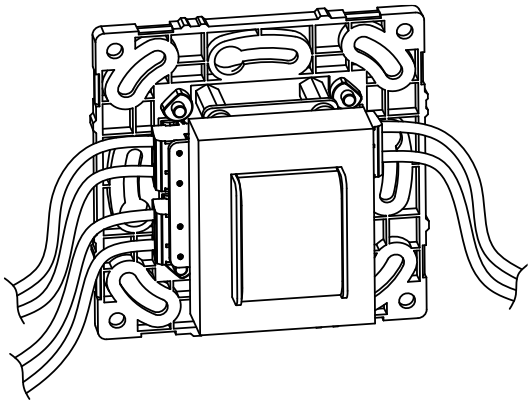

Connect the wires to the Euroblock connectors soldered into the device. **Refer to the Connection Diagram section for the appropriate wiring connections.**

4

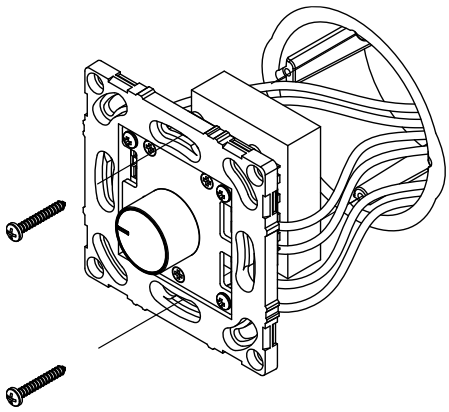

Secure the device to the surface-mount or flush-mount box using the appropriate screws. Mounting boxes and screws are not supplied.

5

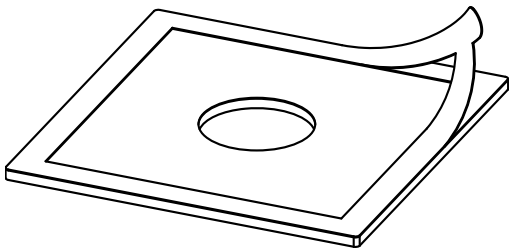

Remove the adhesive protective layer from the front panel cover

6

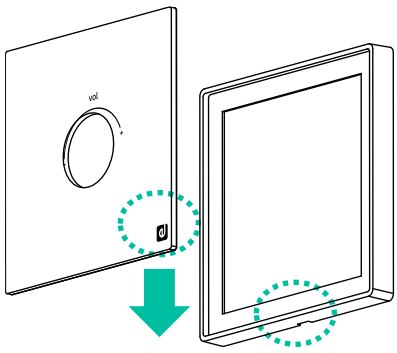

Carefully attach the front panel cover to the frame, ensuring that the slot in the frame is positioned at the bottom to allow for subsequent removal if necessary.

7

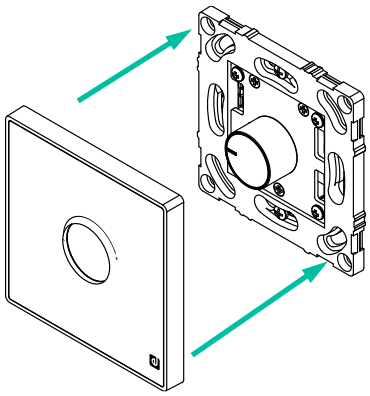

Once the front panel cover is attached to the frame, place both onto the device and press until they snap into place with an audible click.

8

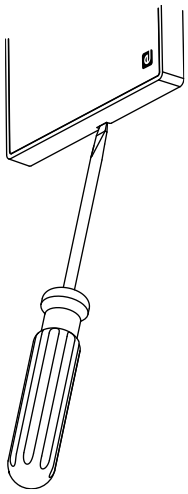

To remove the front panel after installation, insert a flat-head screwdriver into the slot located at the bottom of the frame and gently lever it outward to release it.

6.1.3 Connection Diagram

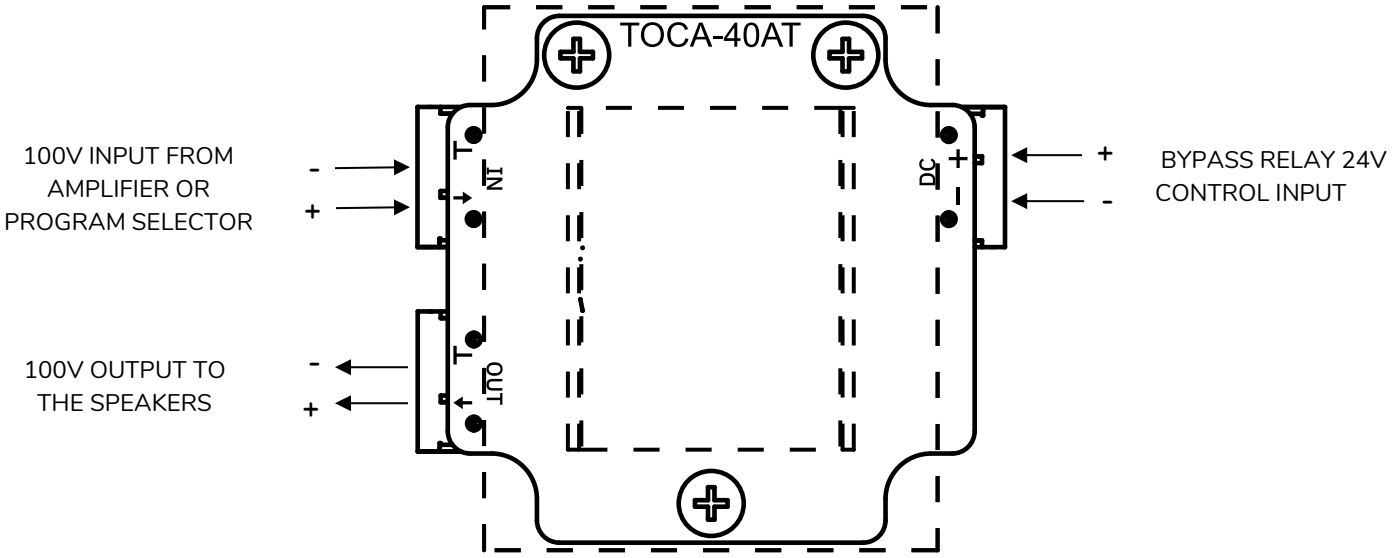

NO: 0VDC = Relay open (bypass inactive)

24VDC = Relay closed (bypass active)

7. REMOTE CONNECTORS

7.1 TOCA-CXCBO

TOCA-CXCBO is a wall-mounted audio interconnection panel equipped with a 3-pin female XLR combo connector plus a stereo jack on the front.

Incorporates screw-type connectors on the rear, ensuring a simple, reliable, and solder-free installation.

7.1.1 Main Features

- 1 x 3-pin female XLR + stereo jack (combo connector).
- Compatibility with standard flush-mounted boxes.
- High-quality acrylic surface.
- Available in white (RAL 9003) or black (RAL 9005).
- Optional double frame TOCA-2FR for installing two TOCA Series units side by side. Available in black or white.

For detailed installation and connection instructions, refer to the next two pages.

7.1.2 Installation Diagram

1

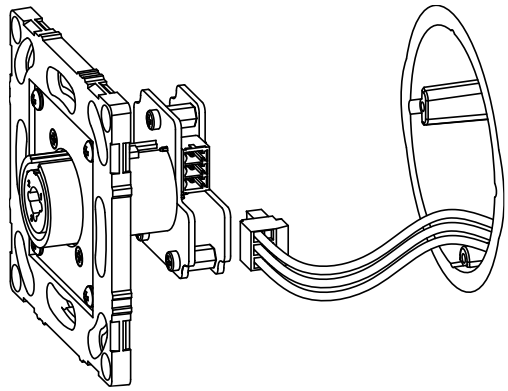

Connect the wires to the supplied Euroblock connector, then insert the connector to the device. **Refer to the Connection Diagram section for the appropriate wiring connections.**

2

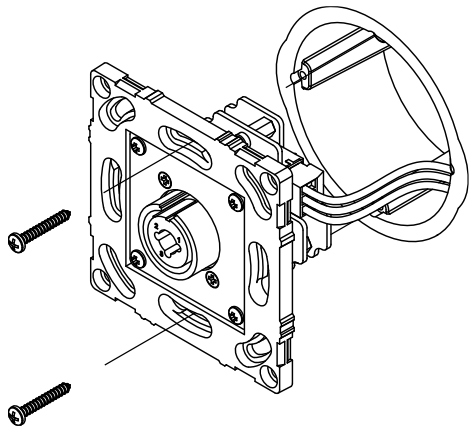

Secure the device to the surface-mount or flush-mount box using the appropriate screws (mounting boxes and screws not supplied).

3

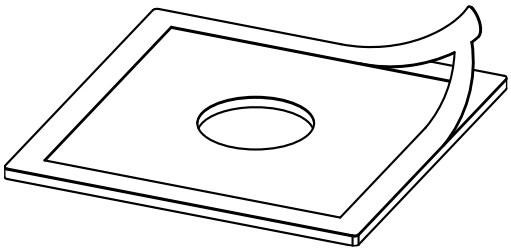

Remove the adhesive protective layer from the front panel cover

4

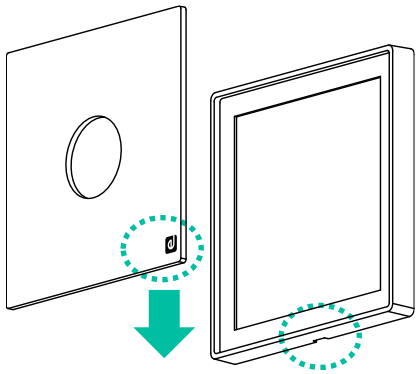

Carefully attach the front panel cover to the frame, ensuring that the slot in the frame is positioned at the bottom to allow for subsequent removal if necessary.

5

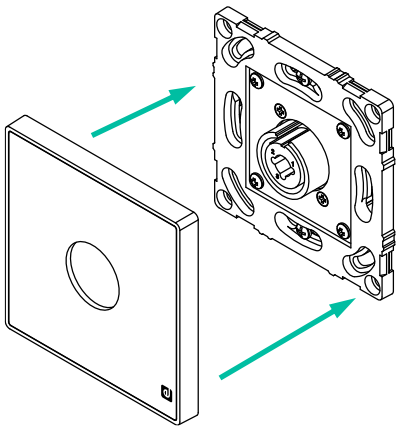

Once the front panel cover is attached to the frame, place both onto the device and press until they snap into place with an audible click.

6

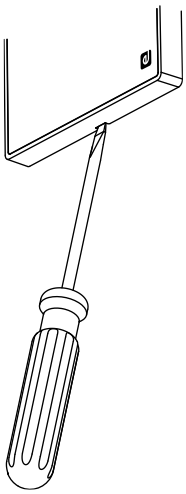

To remove the front panel after installation, insert a flat-head screwdriver into the slot located at the bottom of the frame and gently lever it outward to release it.

7.1.3 Connection Diagram

Terminal Block Diagram (combo connector)		
Pin 1	SLEEVE/GND	1 2 3 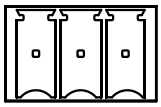
Pin 2	RING/COLD	
Pin 3	TIP/HOT	

7.2 TOCA-CXJRCA

TOCA-CXJRCA is a wall-mounted audio interconnection panel featuring a stereo mini-jack connector and two RCA connectors on the front.

Includes screw-type connectors on the rear, allowing for fast and secure installation without soldering.

7.2.1 Main Features

- 1 Stereo 1/8” plug connectors + 2 RCA connectors on the front.
- Compatibility with standard flush-mounted boxes.
- High-quality acrylic surface.
- Available in white (RAL 9003) or black (RAL 9005).
- Optional double frame TOCA-2FR for installing two TOCA Series units side by side. Available in black or white.

For detailed installation and connection instructions, refer to the next two pages.

7.2.2 Installation Diagram

1

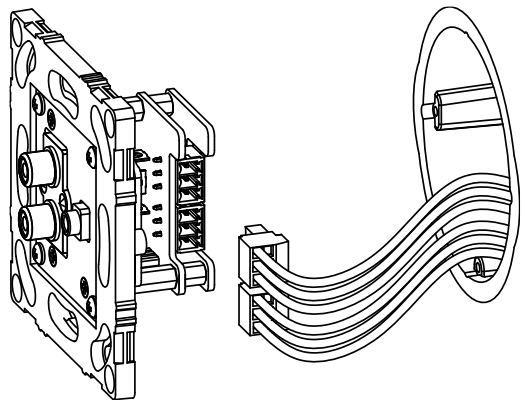

Connect the wires to the 2 supplied Euroblock connectors, then insert the 2 connectors to the device. **Refer to the Connection Diagram section for the appropriate wiring connections.**

2

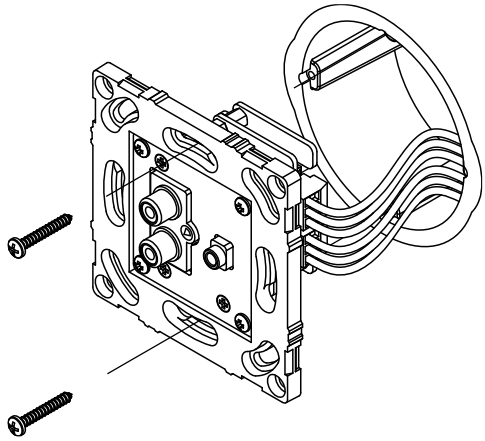

Secure the device to the surface-mount or flush-mount box using the appropriate screws (mounting boxes and screws not supplied).

3

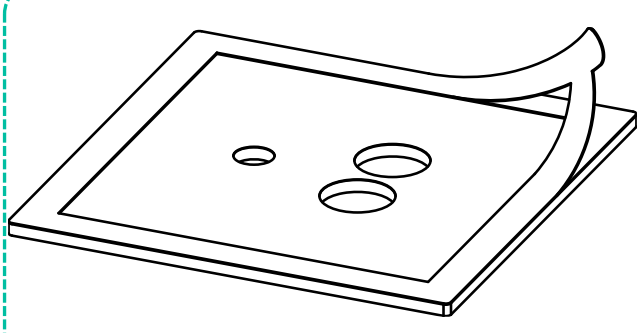

Remove the adhesive protective layer from the front panel cover

4

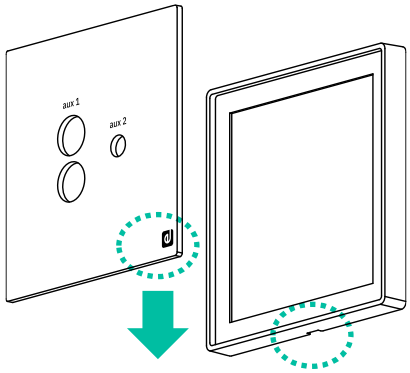

Carefully attach the front panel cover to the frame, ensuring that the slot in the frame is positioned at the bottom to allow for subsequent removal if necessary.

5

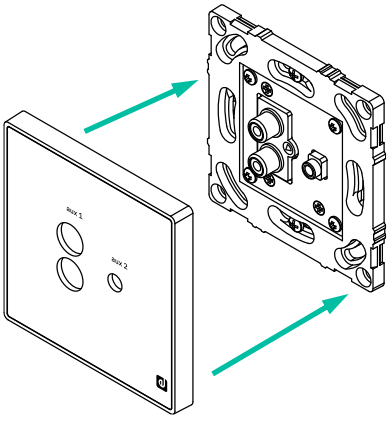

Once the front panel cover is attached to the frame, place both onto the device and press until they snap into place with an audible click.

6

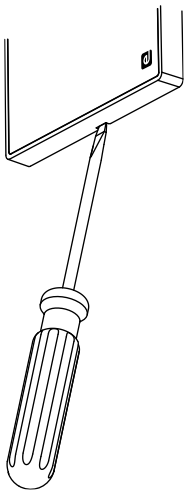

To remove the front panel after installation, insert a flat-head screwdriver into the slot located at the bottom of the frame and gently lever it outward to release it.

7.2.3 Connection Diagram

Terminal Block Diagram (mini-jack / AUX1)		
Pin 1	RING	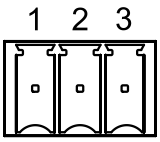
Pin 2	SLEEVE	
Pin 3	TIP	

Terminal Block Diagram (RCA / AUX2)		
Pin 1	RIGHT CHANNEL	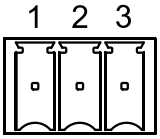
Pin 2	GND	
Pin 3	LEFT CHANNEL	

8. MIXER / CONTROL DEVICES

8.1 TOCA-MIXT

TOCA-MIXT is a wall-mounted control panel designed for applications requiring simple mixing management and local audio signal control, combining ease of use, elegant design, and seamless integration into professional environments.

The microphone input includes a two-band equaliser (Bass/Treble) and can operate with priority on the line signal when the microphone exceeds the preset detection threshold.

8.1.1 Main Features

- Unbalanced stereo line input (1 x minijack).
- Balanced MIC input with BASS and TREBLE controls and selectable Phantom power.
- Independent volume controls for LINE and MIC inputs.
- Talk-over function available (MIC over LINE).
- External PSU required. To ensure correct operation, the use of the Ecler WP24-PSU power supply is recommended. It can power up to ten TOCA-MIXT units, depending on voltage losses caused by cable length and sections.
- Can be combined with a TOCA-CTRL1 unit to work as a remote audio input for HUB Series digital.
- Compatibility with standard flush-mounted boxes.
- High-quality acrylic surface.
- Available in white (RAL 9003) or black (RAL 9005).
- Optional double frame TOCA-2FR for installing two TOCA Series units side by side. Available in black or white.

8.1.2 Panel Functions

1. Volume control at the microphone input.
2. Bass (100 Hz) and treble (10kHz) tone controls at the microphone input (±10 dB).
3. Volume control at the line input.
4. Minijack line input connector (unbalanced signal) .
   - Sensitivity: -12 dBV.
5. XLR connector at the microphone input (balanced signal) .
   - Sensitivity: -20 to -40 dBV.

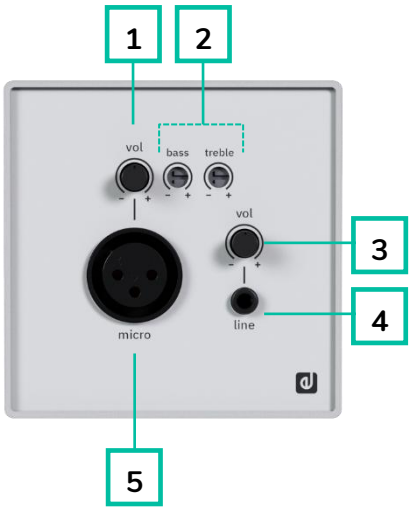

The Line and Microphone signals are mixed with relative levels depending on their respective VOL volume controls. This mixing is available at the Euroblock connector output terminals of the unit (unbalanced signal, line level is 0 dBV). Furthermore, the microphone signal may use the Talkover function in order to automatically attenuate the line signal when the microphone signal reaches the Talkover detection threshold. For detailed instructions on activating the Talkover function, please refer to the Configuration Diagram chapter.

For detailed installation and connection instructions, refer to the next two pages.

8.1.3 Installation Diagram

1

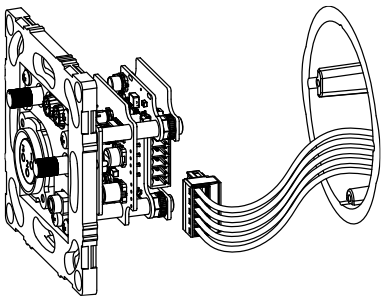

Connect the wires to the supplied Euroblock connector as shown in the Connection Diagram, then plug the connector into the device.

or

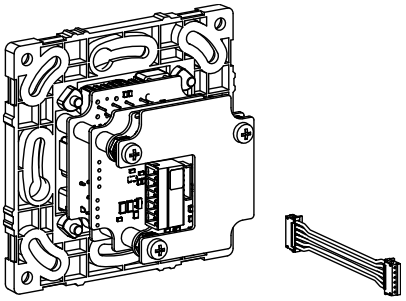

If the device is used together with a TOCA-CTRL1 unit, connect both units using only the supplied TOCA-CTRL1 wire connector; the Euroblock connector is not required.

2

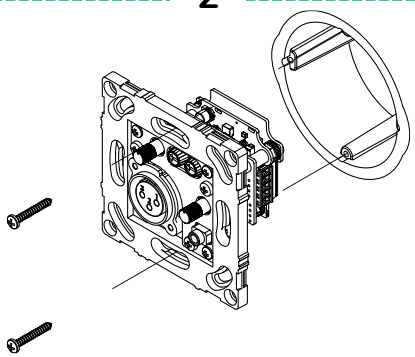

Secure the device to the surface-mount or flush-mount box using the appropriate screws (mounting boxes and screws not supplied).

3

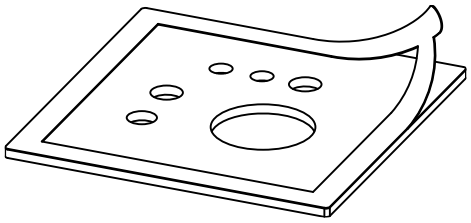

Remove the adhesive protective layer from the front panel cover

4

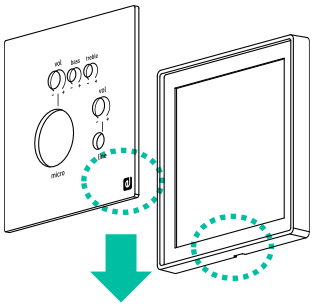

Carefully attach the front panel cover to the frame, ensuring that the slot in the frame is positioned at the bottom to allow for subsequent removal if necessary.

5

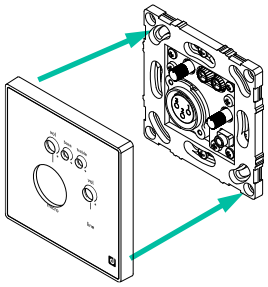

Once the front panel cover is attached to the frame, place both onto the device and press until they snap into place with an audible click.

6

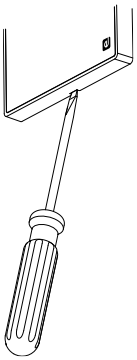

To remove the front panel after installation, insert a flat-head screwdriver into the slot located at the bottom of the frame and gently lever it outward to release it.

8.1.4 Connection Diagram

1. External power supply input: +24VDC.*
2. External power supply input: 0VDC (-).*
3. Balanced audio output: positive terminal (+).
4. Balanced audio output: earth terminal.
5. Balanced audio output: negative terminal (-).

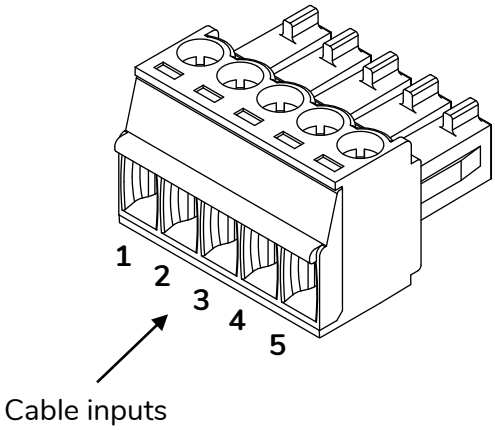

***TOCA-MIXT requires an external 24VDC (min 40mA) power supply connected to terminals 4 and 5. For correct operation, the use of the Ecler WP24-PSU, which can power up to ten TOCA-MIXT units (depending on voltage losses caused by cable lengths and sections).**

Since the TOCA-MIXT does not incorporate any electromagnetic shielding, we strongly recommend that it is installed well away from power sources and high-voltage cables.

For the installation of a TOCA-MIXT unit next to a TOCA-CTRL1 wall panel on surface or flush mounting, see the TOCA-CTRL1 user manual.

8.1.5 Configuration Diagram

1. **MIC sensitivity selection:** -20 dBV (default position) or -40 dBV.
2. **Talkover function:** ON / OFF (default position).
   - Talkover attenuation over the line input: 30 dB.
   - Talkover maintenance time three seconds.
3. **Phantom power supply for the MICRO input:** ON / OFF (default position).

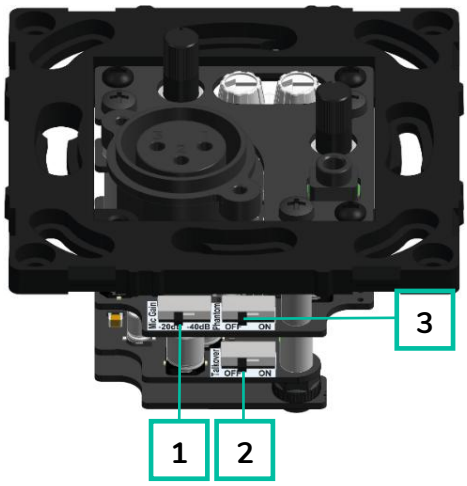

This operation must be performed with the unit power supply switched off.

8.2 TOCA-CTRL1

TOCA-CTRL1 is a digital wall control compatible with HUB Series and configurable through the web application embedded. It allows you to configure source selection, volume control and equalization for a given zone, including all or some of the functions.

8.2.1 Main Features

- Digital wall control panel compatible with HUB Series digital zoners.
- Volume adjustment, source selection and EQ (programmable).
- Compatible with TOCA Series panels with audio connector, for sending audio, control signals and DC supply over a single CAT5 or higher cable.
- Can be combined with a TOCA-MIXT to work as a remote audio input for HUB Series digital zoner.
- Optional external PSU (24VDC). Compatible with Ecler WP24-PSU power supply unit.
- Compatibility with standard flush-mounted boxes.
- High-quality acrylic surface.
- Available in white (RAL 9003) or black (RAL 9005).
- Optional double frame for installing two TOCA Series units side by side. Available in black (TOCA-2FRBK) or white (TOCA-2FRWH).

8.2.2 Panel Functions

8.2.2.1 Front Panel

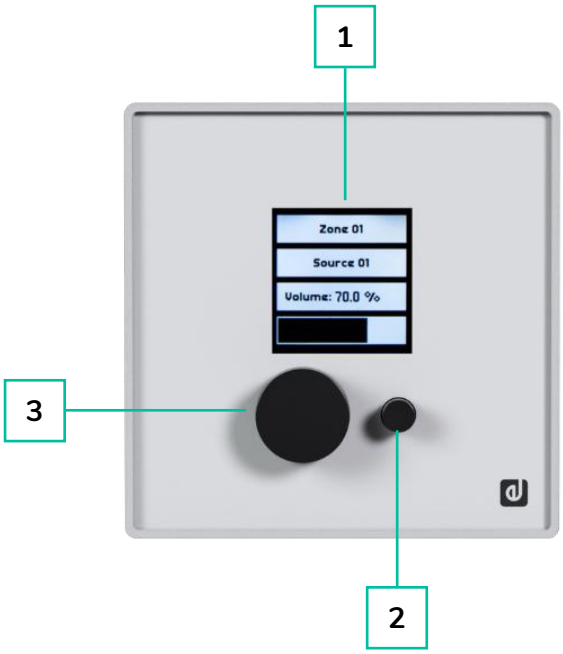

1. LCD screen
2. Selection button
3. Rotary encoder

8.2.2.2 Rear Panel

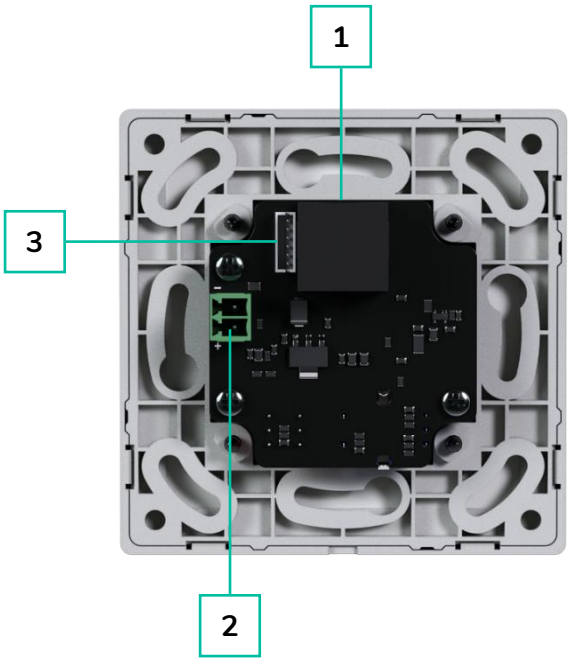

1. RJ-45 connector.
2. External power supply connector 24VDC.
3. Connector for TOCA-MIXT interconnection.

8.2.3 Installation & Connection Diagram

1

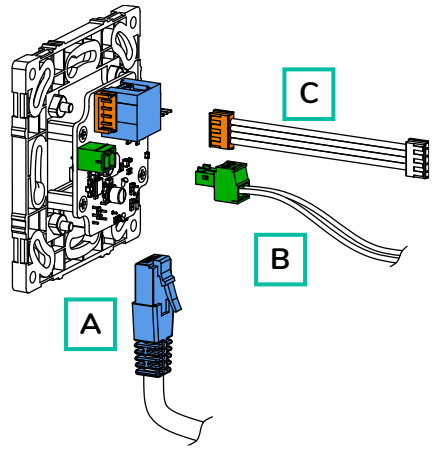

A. Insert an RJ45 connector (not supplied) into the device. This connection is always required.

B. If the cable length requires an external power supply, connect the PSU to the supplied Euroblock connector, then insert the connector into the device. **Refer to the cable-length limits and PSU wiring section**.

C. If the device is used together with a TOCA-MIXT unit, connect both units using the supplied wire connector with the TOCA-MIXT unit. In this configuration, Connector A is always required, and Connector B is required depending on the cable length.

2

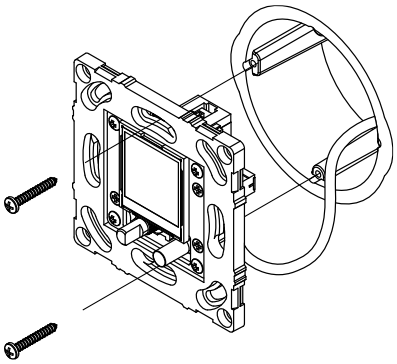

Secure the device to the surface-mount or flush-mount box using the appropriate screws (mounting boxes and screws not supplied).

3

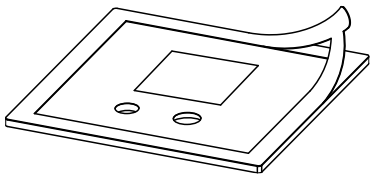

Remove the adhesive protective layer from the front panel cover

4

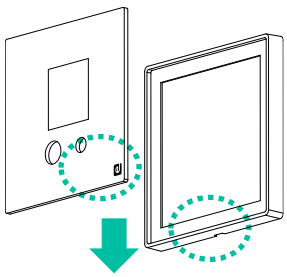

Carefully attach the front panel cover to the frame, ensuring that the slot in the frame is positioned at the bottom to allow for subsequent removal if necessary.

5

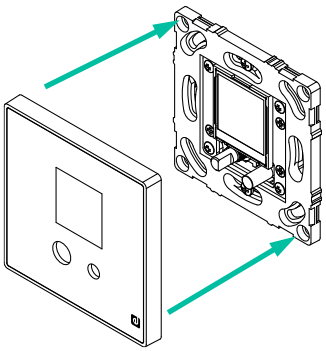

Once the front panel cover is attached to the frame, place both onto the device and press until they snap into place with an audible click.

6

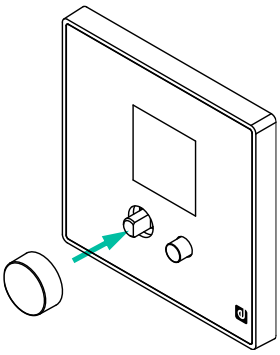

Install and secure the encoder rotary knob, ensuring that it is properly attached.

7

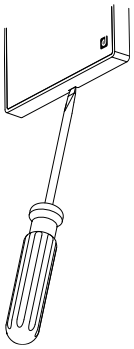

To remove the front panel after installation, insert a flat-head screwdriver into the slot located at the bottom of the frame and gently lever it outward to release it.

8.2.4 Cable Length Guidelines and External Power Supply Connection

The maximum lengths for CAT5 or higher cable connecting TOCA-CTRL1 to a HUB unit depend on the AWG category of the cable used. Examples:

	AWG24 Cable Max. Length	AWG23 Cable Max. Length	AWG22 Cable Max. Length
TOCA-CTRL1	270 metres	340 metres	425 metres
TOCA-CTRL1 + TOCA-MIXT	85 metres	105 metres	130 metres

If the cable length exceeds the recommended limit shown above, the TOCA-CTRL1 may continue to operate, but noise may be superimposed on the signal entering the TOCA-MIXT. To avoid this, power the TOCA-CTRL1 with an external 24 VDC PSU (the Ecler WP24-PSU is the recommended option). With an external PSU and good-quality CAT5e cable, digital data exchange between the HUB unit and TOCA-CTRL1 has been successfully tested over wiring distances of up to 600 metres.

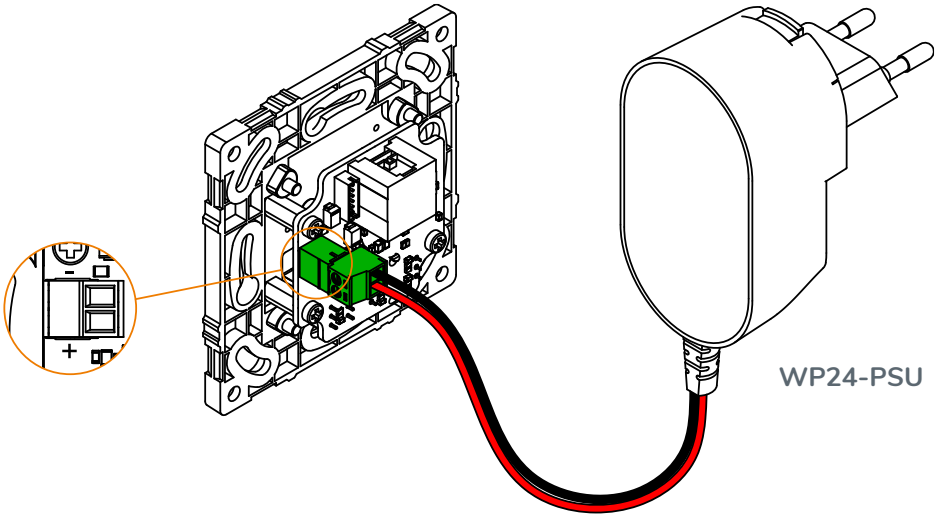

8.2.5 Start-up & Operation

8.2.5.1 Controls

TOCA-CTRL1 features 2 controls on its front panel:

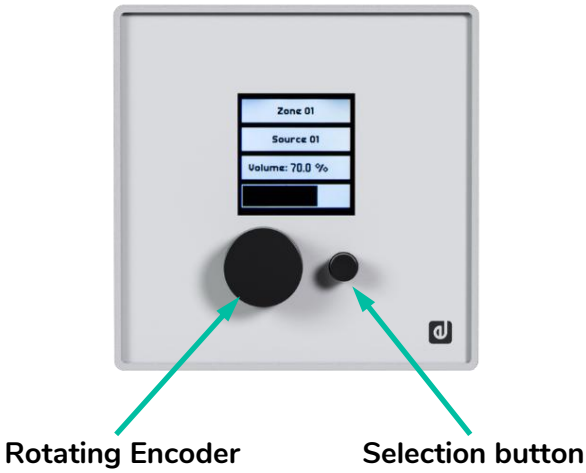

The main screen provides information, including the controlled zone's label or name, the currently selected source, and the zone's volume level.

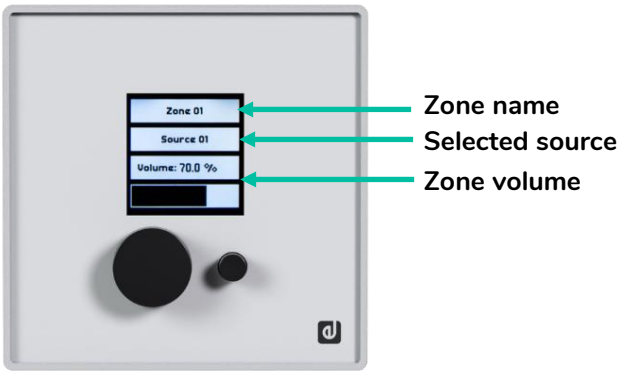

8.2.5.2 Navigation and Operation

- **Selection Button (Short Press):**
  - Use the selection button to toggle between source selection and volume control modes. The currently editable option is highlighted with a white background. When an option is selected, the corresponding indicator (VOL or SEL) will be framed and blinking.

- **Rotary Encoder:**
  - **Volume Control (VOL):** Rotate the encoder to adjust the volume for the selected zone. Changes are applied instantly.

- **Mute Function:** Press and hold the encoder for 2 seconds to enable or disable the mute function for the zone.
- **Source Selection (SEL):** Rotate the encoder to scroll through the available sources*. During scrolling, no changes are made until a source is selected. The name of each source will flash as you scroll. Press the encoder to confirm and apply the selection. If no selection is made after a few seconds, the system will revert to the previous state without applying changes.

*** The available sources can be selected using the HANGAR application.** For comprehensive instructions and additional details, please consult the HANGAR web application section in the HUB Series user manual.

8.2.5.3 Equalization Screen

The equalization screen allows users to adjust the tone controls (treble, middle, and bass) for the selected zone.

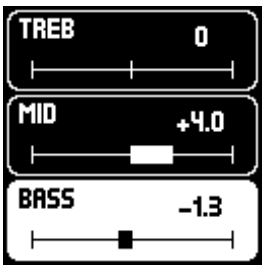

Treble Control

Middle Control

Bass Control

To enter the Equalization Screen:

- Press and hold the selection button for 2 seconds.

Navigating and Adjusting Tone Controls

- Once on the equalization screen, use the selection button (short press) to cycle through the available tone controls: Treble, Middle, and Bass.
- Adjust the selected tone control by rotating the rotary encoder to the desired value.

To exit the Equalization Screen

- To return to the main screen, press and hold the selection button for 2 seconds.

If no adjustments are made for several seconds, the system will automatically revert to the main screen.

8.2.5.4 Information Messages

This section describes the status and informational messages displayed by TOCA-CTRL1 during operation and system events.

- **Firmware Update**
  - **Automatic Firmware Update:** When a TOCA-CTRL1 unit is connected to a HUB device, it automatically checks for firmware updates. If an update is required, the process is performed automatically, without manual intervention. The message **"UPDATING FIRMWARE"** will be displayed during the update, which typically completes within a few seconds.
  - **Paging Station Initialization:** When connecting an eMPAGE paging station to the PAGER port of a powered-on HUB unit, it is normal to restart all connected paging stations and TOCA-CTRL1 controllers. This process takes a few seconds, after which all devices become fully functional.

- **Device Status Screens**
  - **INFORMATION:** Press and hold both control keys for a few seconds to access the information screen. This screen displays the name or label of TOCA-CTRL1 (which may differ from the main screen area label, as programmed via the HANGAR web application) and the current firmware version. Firmware updates are managed automatically when connecting to a HUB device, ensuring compatibility. Manual firmware updates are not required.

  - **DISABLED:** Displayed when the device is disabled via the unit's global enable setting in the HANGAR web application.

  - **OFFLINE:** Displayed when the device is not connected to a HUB unit or if there is a connection issue.

- **DISABLED CONTROL:** Displayed when attempting to use a control (volume, source selection, or equalization) that is disabled for the TOCA-CTRL1 panel.

- **PANEL LOCKED:** Displayed when the temporary lock is activated for the user. To activate or deactivate this lock, press and hold both the selection key and rotary encoder for approximately 5 seconds. After 2 seconds, the information screen will appear; continue holding until the lock message is displayed. Unlocking uses the same sequence.

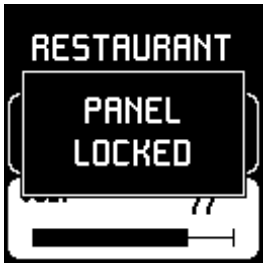

This hidden function is useful for temporarily protecting the system from unauthorized manipulation (e.g., during events to prevent attendees from changing sound content or volume).

- **PANIC ACTIVE:** Displayed when the PANIC button (muting all 16 audio outputs) is active. This function is accessible via the HANGAR web application.

9. TECHNICAL DATA

9.1 Technical Specifications

9.1.1 TOCA-VOL

TOCA-VOL	
SYSTEM	
Number of output channels	1
MONITORING AND CONTROL	
Buttons	Volume
PHYSICAL	
Type	Wall panel Volume control
Format	Single Gang EU Format
Installation options	Surface, In - wall
Enclosure material	Acrylic front panel, plastic frame
Operating temperature	Min: 0°C / 32°F Max: 35°C / 95°F
Operating humidity	<85% HR
Storage temperature	Min: -10°C / 14°F Max: 50°C / 122°F
Storage humidity	<90% HR
Finished colour	White (RAL 9003) / Black (RAL9005)
Included accessories	1x Euroblock connector
Optional accessories	Optional double frame TOCA-2FR for installing two TOCA Series units side by side. Available in black or white.
Dimensions (WxHxD)	79.4 x 79.4 x 21 mm / 3.13 x 3.13 x 0.83 in.
Weight	0.1 kg / 0.22 lb
Pieces per box	1
Shipping dimensions (WxHxD)	150 x 110 x 100 mm / 5.91 x 4.33 x 3.94 in.
Shipping weight	0.21 kg / 0.46 lb

9.1.2 TOCA-VOLSR

TOCA-VOLSR	
SYSTEM	
Number of output channels	2
MONITORING AND CONTROL	
Buttons	Volume, Selector
PHYSICAL	
Type	Wall panel Volume-Selection control
Format	Single Gang EU Format
Installation options	Surface, In - wall
Enclosure material	Acrylic front panel, plastic frame
Operating temperature	Min: 0°C / 32°F Max: 35°C / 95°F
Operating humidity	<85% HR
Storage temperature	Min: -10°C / 14°F Max: 50°C / 122°F
Storage humidity	<90% HR
Finished colour	White (RAL 9003) / Black (RAL9005)
Included accessories	2x Euroblock connector
Optional accessories	Optional double frame TOCA-2FR for installing two TOCA Series units side by side. Available in black or white.
Dimensions (WxHxD)	79.4 x 79.4 x 21 mm / 3.13 x 3.13 x 0.83 in.
Weight	0.105 kg / 0.23 lb
Pieces per box	1
Shipping dimensions (WxHxD)	150 x 110 x 100 mm / 5.91 x 4.33 x 3.94 in.
Shipping weight	0.215 kg / 0.474 lb

9.1.3 TOCA-40AT

TOCA-40AT	
SYSTEM	
Number of output channels	1
Number of input channels	1
LINE INPUTS	
Input connection type	Push 2-pin, 70/100V line max 40W
LINE OUTPUTS	
Output connection type	Push 2-pin, 70/100V line
MONITORING AND CONTROL	
Buttons	Rotary atenuator, priority relay 24VDC
PHYSICAL	
Type	Wall panel HIZ Attenuattor
Format	Single Gang EU Format
Installation options	Surface, In - wall
Enclosure material	Acrylic front panel, plastic frame
Operating temperature	Min: 0°C / 32°F Max: 35°C / 95°F
Operating humidity	<85% HR
Storage temperature	Min: -10°C / 14°F Max: 50°C / 122°F
Storage humidity	<90% HR
Finished colour	White (RAL 9003) / Black (RAL9005)
Included accessories	-
Optional accessories	Optional double frame TOCA-2FR for installing two TOCA Series units side by side. Available in black or white.
Dimensions (WxHxD)	79.4 x 79.4 x 43.1 mm / 3.13 x 3.13 x 1.70 in.
Weight	0.33 kg / 0.73 lb
Pieces per box	1
Shipping dimensions (WxHxD)	150 x 110 x 100 mm / 5.91 x 4.33 x 3.94 in.
Shipping weight	0.44 kg / 0.97 lb

9.1.4 TOCA-CXCBO

TOCA-CXCBO	
SYSTEM	
Number of output channels	1
Number of input channels	1
LINE INPUTS	
Input connection type	XLR female, 3-pin + stereo jack (combo connector)
LINE OUTPUTS	
Output connection type	Euroblock, 3-pin, mono balanced
PHYSICAL	
Type	Wall panel input connection
Format	Single Gang EU Format
Installation options	Surface, In - wall
Enclosure material	Acrylic front panel, plastic frame
Operating temperature	Min: 0°C / 32°F Max: 35°C / 95°F
Operating humidity	<85% HR
Storage temperature	Min: -10°C / 14°F Max: 50°C / 122°F
Storage humidity	<90% HR
Finished colour	White (RAL 9003) / Black (RAL9005)
Included accessories	1x Euroblock connector
Optional accessories	Optional double frame TOCA-2FR for installing two TOCA Series units side by side. Available in black or white.
Dimensions (WxHxD)	79.4 x 79.4 x 33.2 mm / 3.13 x 3.13 x 1.31 in.
Weight	0.1 kg / 0.22 lb
Pieces per box	1
Shipping dimensions (WxHxD)	150 x 110 x 100 mm / 5.91 x 4.33 x 3.94 in.
Shipping weight	0.21 kg / 0.46 lb

9.1.5 TOCA-CXJRCA

TOCA-CXRJCA	
SYSTEM	
Number of output channels	2
Number of input channels	2
Line INPUTS	
Input connection type	2 x Euroblock, 3-pin, stereo unbalanced
Line OUTPUTS	
Output connection type	3.5mm Jack + 2 RCA
PHYSICAL	
Type	Wall panel Inputs
Format	Single Gang EU Format
Installation options	Surface, In - wall
Enclosure material	Acrylic front panel, plastic frame
Operating temperature	Min: 0°C / 32°F Max: 35°C / 95°F
Operating humidity	<85% HR
Storage temperature	Min: -10°C / 14°F Max: 50°C / 122°F
Storage humidity	<90% HR
Finished colour	White (RAL 9003) / Black (RAL9005)
Included accessories	2x Euroblock connector
Optional accessories	Optional double frame TOCA-2FR for installing two TOCA Series units side by side. Available in black or white.
Dimensions (WxHxD)	79.4 x 79.4 x 28.8 mm / 3.13 x 3.13 x 1.13 in.
Weight	0.1 kg / 0.22 lb
Pieces per box	1
Shipping dimensions (WxHxD)	150 x 110 x 100 mm / 5.91 x 4.33 x 3.94 in.
Shipping weight	0.21 kg / 0.46 lb

9.1.6 TOCA-MIXT

TOCA-MIXT	
ANALOGUE AUDIO INPUT PORTS	
Number of input ports	1 x Stereo Unbalanced LINE 1 x Mono Balanced MICRO
Connection type	1 x 3.5 mm Jack Stereo 1 x XLR3-F
Input sensitivity	-10 dBV -20 or -40 dBV
Input impedance	10 kΩ > 1 kΩ
THD + Noise	LINE <0.005% MICRO <0.002% (-20dB), <0,01% (-40dB)
CMRR	MICRO >70 dB @ 1 kHz
Phantom power	48VDC/5mA Max (Default OFF)
ANALOGUE AUDIO OUTPUT PORTS	
Number of output ports	1 x Stereo Balanced HOUSE
Connection type	1 x Euroblock
Max output level	Electr.BAL 21dBV = 23dBu UNBAL 21dBV = 23dBu
DEVICE CONTROL	
Tone Control	2-way tone control BASS +10/-10dB TREBLE +10/-10dB
Tone Frequency Cut	BASS 100Hz TREBLE 10kHz
Talkover	-30dB / 3s aprox
Control Buttons	Internal switches: 1x Phantom enable/disable 1x Talk-over enable/disable 1x MICRO Sensitivity selection
Status Indicators	Internal supplies are correct
ELECTRICAL	
Power supply	External 12-24 VDC
Power consumption	2,5 VA
PHYSICAL	
Type	Wall panel Mixer
Format	Single Gang EU Format
Installation options	Surface, In - wall
Enclosure material	Acrylic front panel, plastic frame
Operating temperature	Min: 0°C / 32°F Max: 35°C / 95°F
Operating humidity	<85% HR
Storage temperature	Min: -10°C / 14°F Max: 50°C / 122°F
Storage humidity	<90% HR
Finished colour	White (RAL 9003) / Black (RAL9005)
Included accessories	1x Euroblock connector, 1x TOCA-CTRL1 wire connector.
Optional accessories	Optional double frame TOCA-2FR for installing two TOCA Series units side by side. Available in black or white.

Dimensions (WxHxD)	79.4 x 79.4 x 36.7 mm / 3.13 x 3.13 x 1.44 in.
Weight	0.1 kg / 0.22 lb
Pieces per box	1
Shipping dimensions (WxHxD)	150 x 110 x 100 mm / 5.9 x 4.33 x 3.93 in.
Shipping weight	0.21 kg / 0.46 lb

9.1.7 TOCA-CTRL1

TOCA-CTRL1	
SYSTEM	
Number of output channels	1
Number of input channels	1
LINE INPUTS	
Input connection type	6-pin JST from MIX-T
LINE OUTPUTS	
Output connection type	RJ45
SCREEN/DISPLAY	
Resolution	128x128 pixels
Display	LCD
MONITORING AND CONTROL	
Buttons	Encoder, Selection key
CONNECTIVITY	
Ethernet	1 RJ45 connector, cable: Cat-5e or better
Programing and control	Configurable through the web application HANGAR
ELECTRICAL	
Power supply	Optional, 24VDC (min. 30mA). Recommended external power supply: Ecler WP24-PSU
PHYSICAL	
Type	Wall panel control
Format	Single Gang EU Format
Installation options	Surface, In - wall
Enclosure material	Acrylic front panel, plastic frame
Operating temperature	Min: 0°C / 32°F Max: 35°C / 95°F
Operating humidity	<85% HR
Storage temperature	Min: -10°C / 14°F Max: 50°C / 122°F
Storage humidity	<90% HR
Finished colour	White (RAL 9003) / Black (RAL9005)
Included accessories	1x Euroblock connector
Optional accessories	Optional double frame TOCA-2FR for installing two TOCA Series units side by side. Available in black or white.
Dimensions (WxHxD)	79.4 x 79.4 x 24 mm / 3.13 x 3.13 x 0.94 in.
Weight	0.1 kg / 0.22 lb
Pieces per box	1
Shipping dimensions (WxHxD)	150 x 110 x 100 mm / 5.91 x 4.33 x 3.94 in.
Shipping weight	0.21 kg / 0.46 lb

9.2 Mechanical Diagram

9.2.1 TOCA-VOL

All measurements are **in mm.**

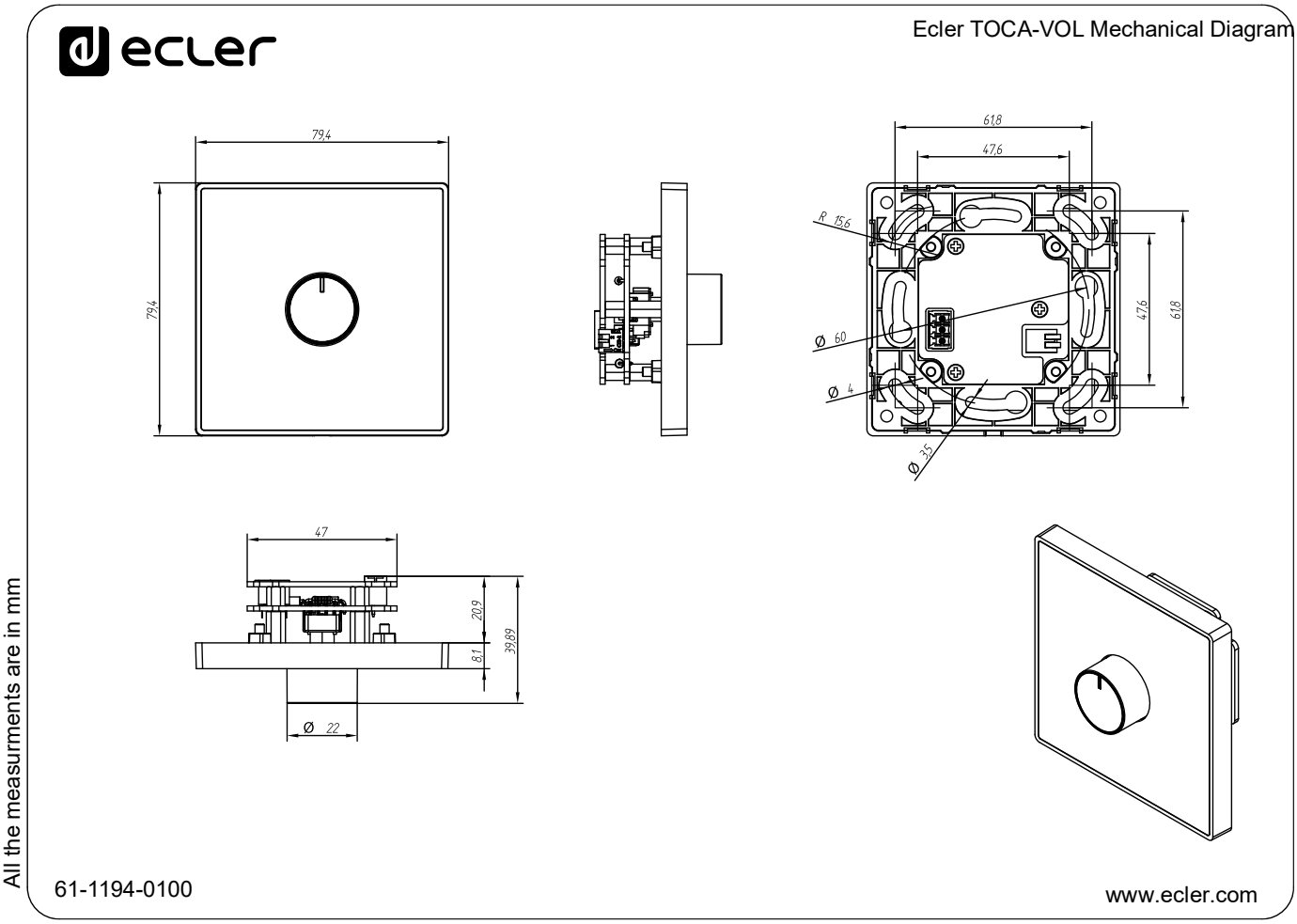

All the measurments are in mm

9.2.2 TOCA-VOLSR

All measurements are **in mm.**

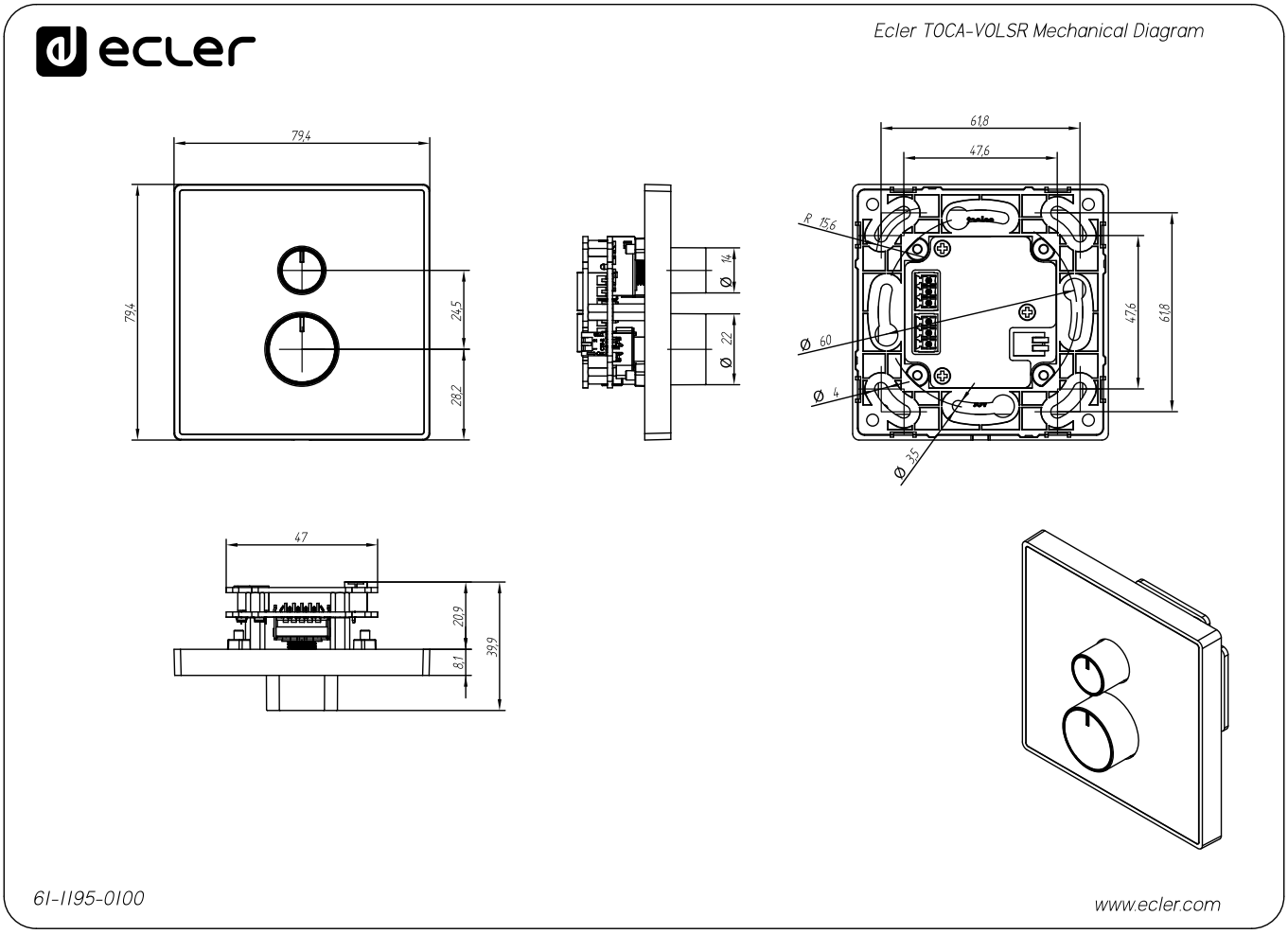

All the measurments are in mm

9.2.3 TOCA-40AT

All measurements are **in mm.**

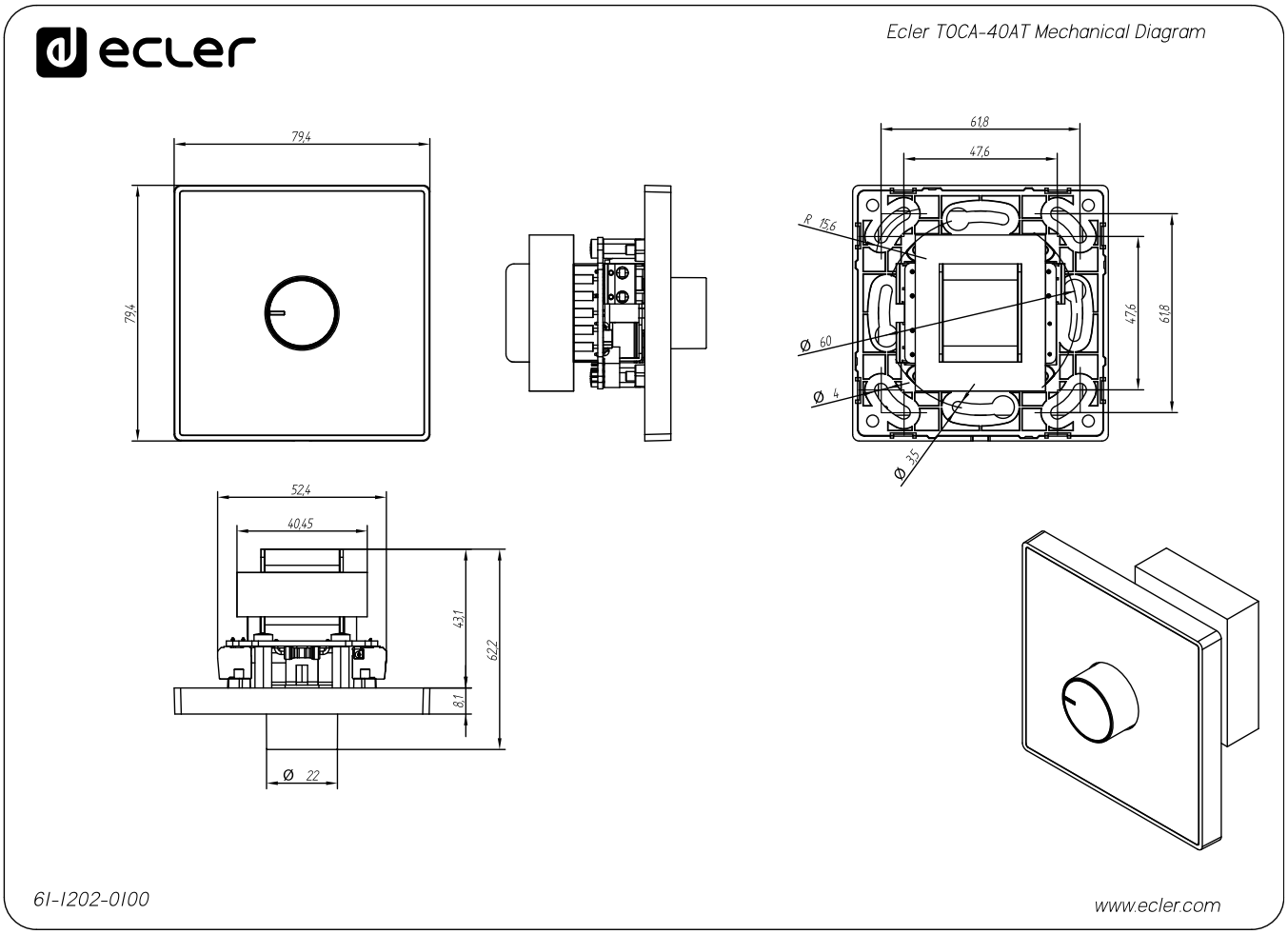

9.2.4 TOCA-CXCBO

All measurements are **in mm.**

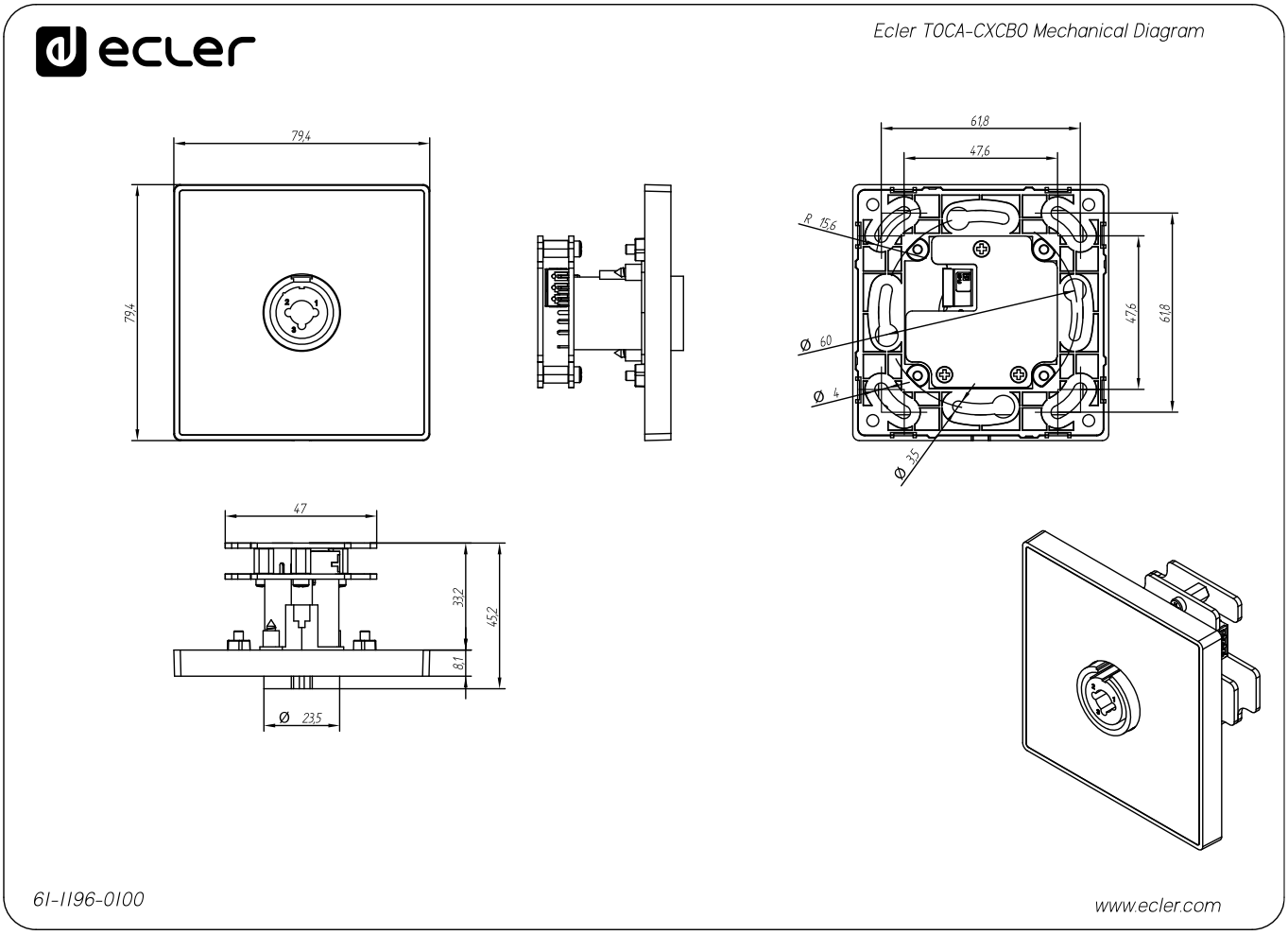

9.2.5 TOCA-CXJRCA

All measurements are **in mm.**

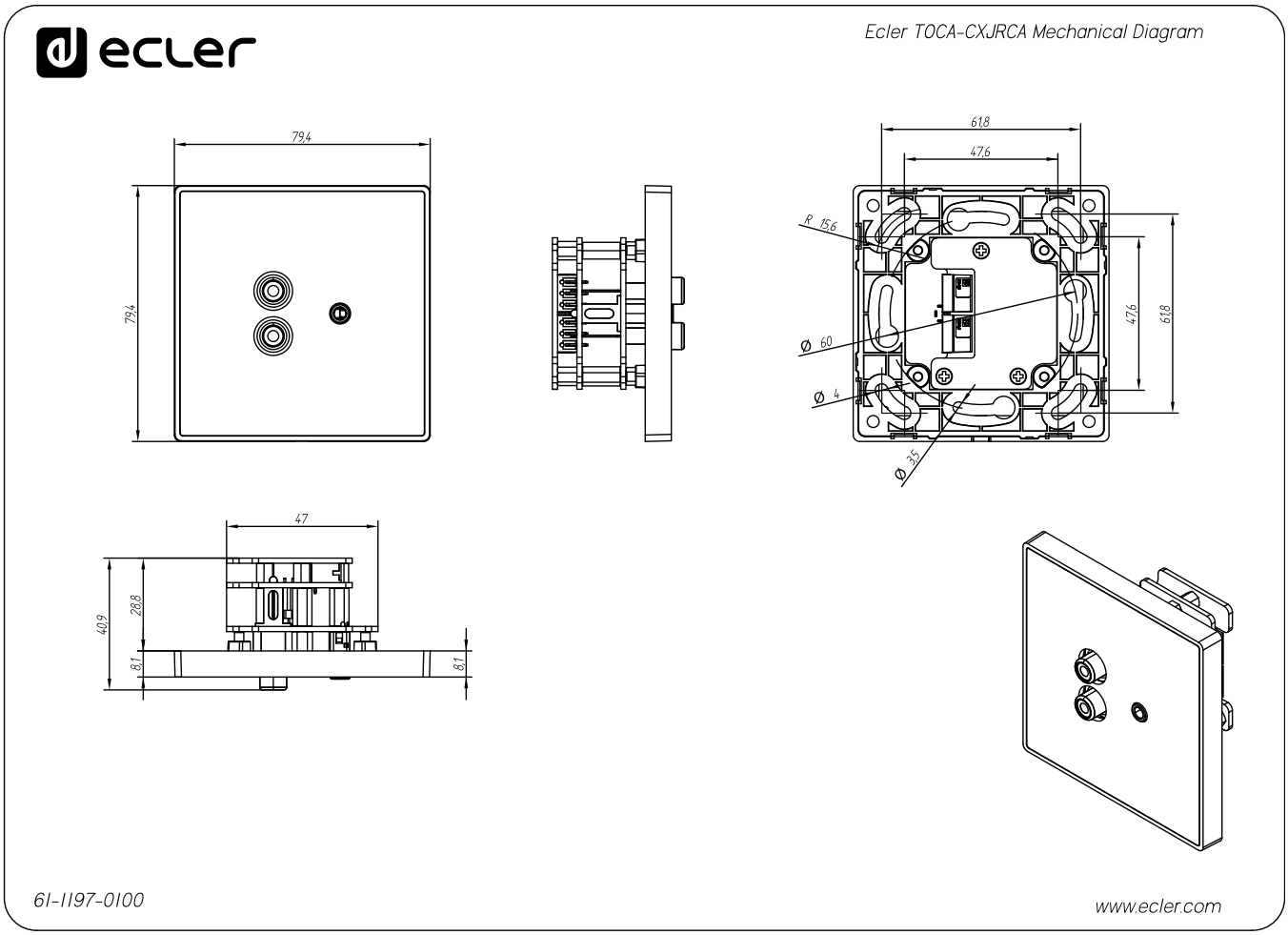

9.2.6 TOCA-MIXT

All measurements are **in mm.**

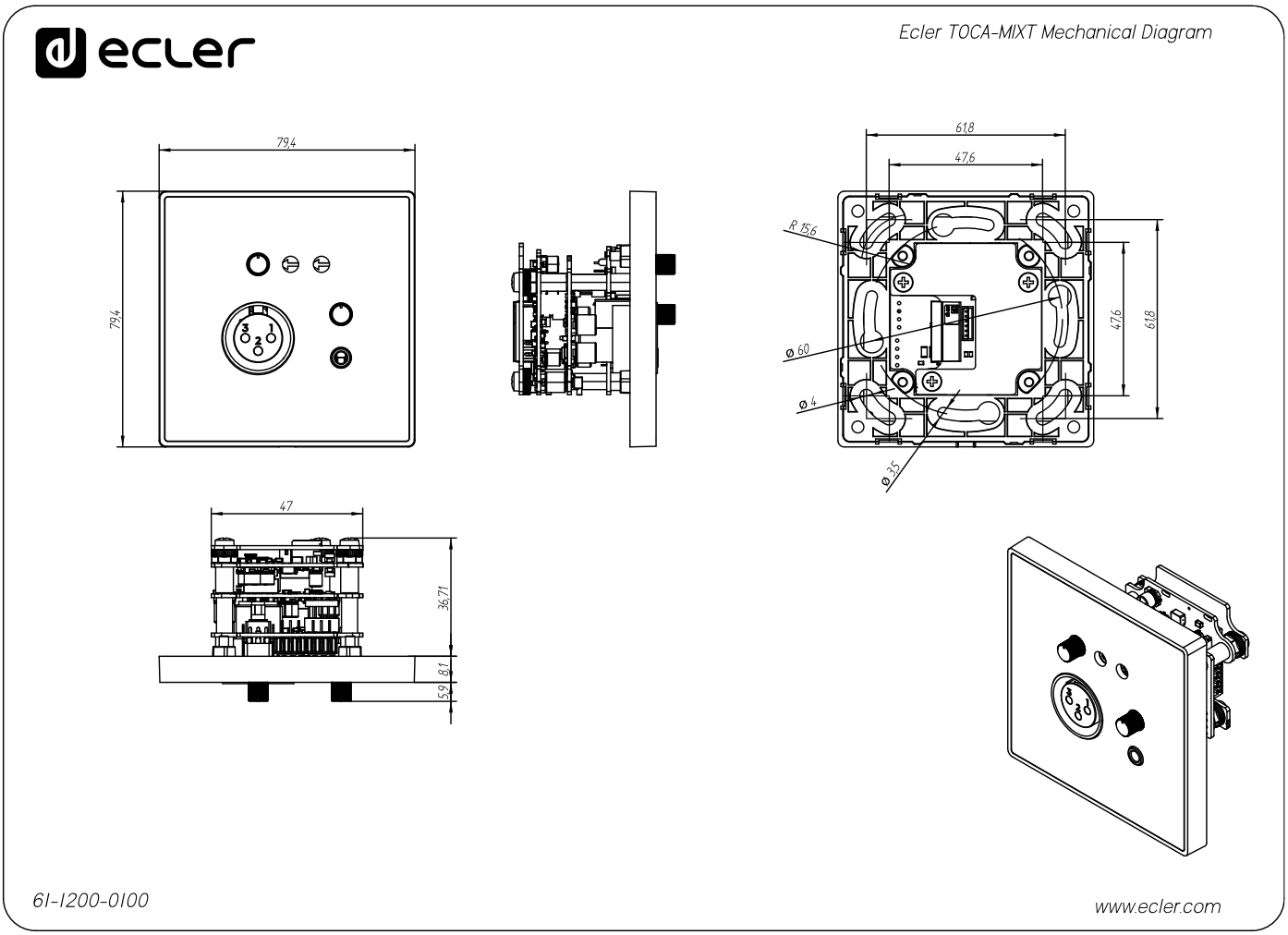

All the measurments are in mm

9.2.7 TOCA-CTRL1
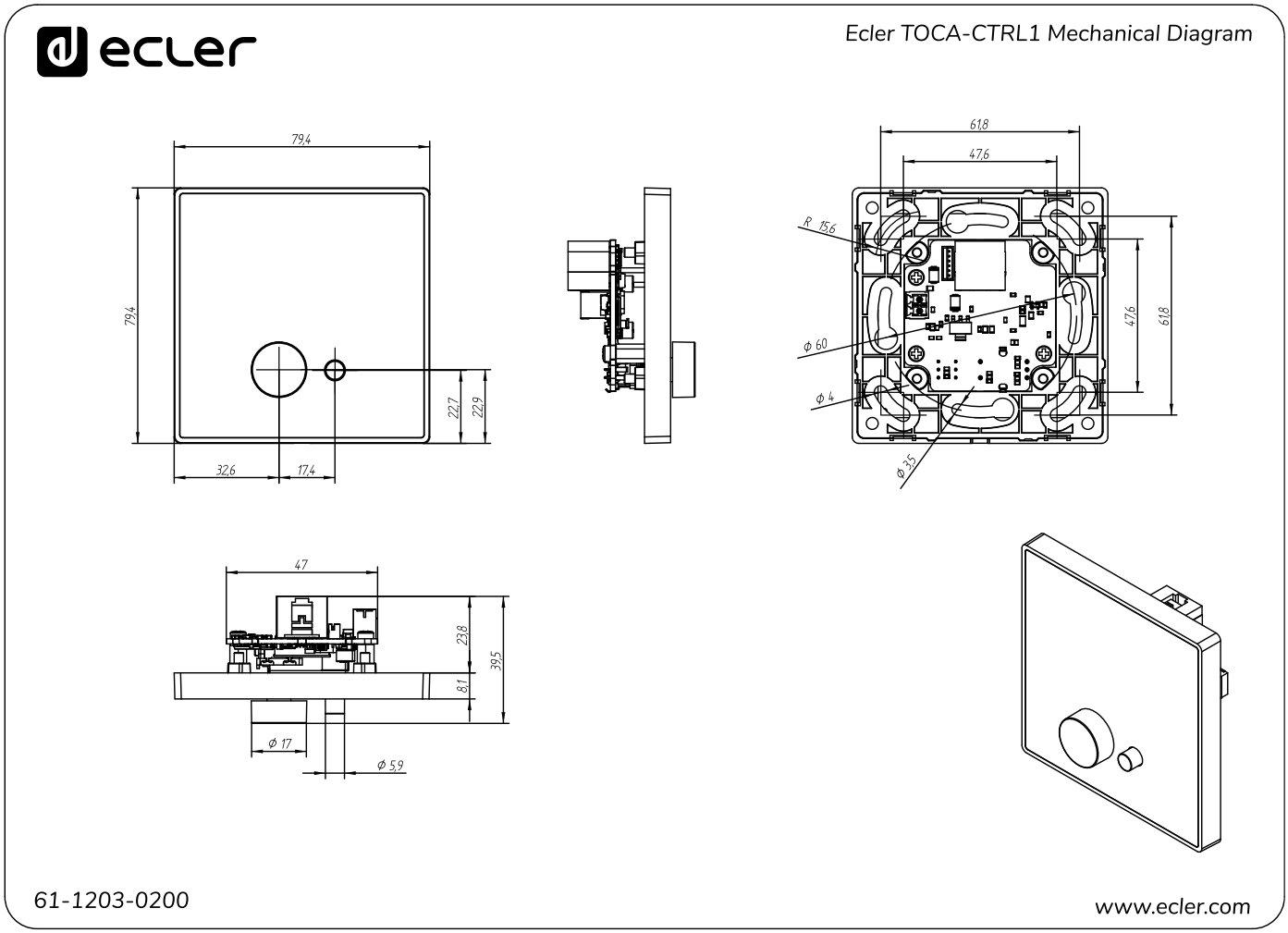
All measurements are **in mm.**